Small Flood Risk Management Project Hatch, NM

Appendix J

Civil Engineering

December 2016

US Army Corps of Engineers ®
Albuquerque District

(*This page is intentionally left blank.)*

Table of Contents

1 - SITE DEVELOPMENT 1
1.1 Introduction 1
1.2 Existing Conditions 1
1.3 Survey 2
1.4 Demolition and Relocations 2
1.5 Site Development 2
1.5.1 Dam Section 2
1.5.2 Dam Spillway 3
1.5.3 Dam Outlet Works 3
1.5.4 Dam Reservoir 3
1.5.5 Spring Canyon Channel 3
1.5.6 Maintenance Roads 4
1.6 Access and Staging Area 4
1.7 Grading 5
1.8 Erosion Protection 5
1.9 Storm Drain Line 5
1.10 Utilities 5
1.11 Fencing 6
1.12 Turf and Landscaping 6
1.13 Quantities 6
1.14 CADD 7
2 - SECTION 205 - HATCH NEW MEXICO - SUMMARY OF DAM C PROJECT FEATURES 1
2.1 Spillway 1
2.2 Dam 1
2.2.1 EMBANKMENTS 1
2.2.2 OUTLET WORKS 2
2.3 Channel (at Spring Canyon) 2
2.4 Miscellaneous 2
2.4.1 FILL AREA BETWEEN RODEY LATERAL AND DAM 2
2.4.2 RESERVOIR GRADING 2
2.4.3 STORM DRAIN LINE 3

EXHIBIT A - DAM C FEASIBILITY DRAWINGS 1
EXHIBIT B – QUANTITY CALCULATIONS FOR DAMS A, B AND C..... 1
EXHIBIT C – QUANTITY ADJUSTMENTS FOR DAM C 1

1 - SITE DEVELOPMENT

1.1 Introduction

A new dam will be provided to protect the Village of Hatch, New Mexico, from flooding. Three dam alternatives were analyzed, each providing protection associated with different design capacities. The recommended dam alternative is sized for a 0.2% annual chance exceedance flood event; and is referred to as "Dam C" or "the dam" in the following portions of this write-up. Dam C will detain a storage capacity of 283 acre-feet (AF). This storage capacity consists of a 30 AF sediment pool and 253 AF of water. Dam C is approximately 4191 feet in length and contains a roller compacted concrete spillway and apron, and concrete outlet works. Access roads are required on both sides of the dam and ramps will be constructed to access the top of the dam from these roads. Fencing encloses the reservoir and gates are provided as needed for access to the new dam. A new trapezoidal channel transports runoff from nearby Spring Canyon Dam to Dam C's reservoir. A new storm drain line is provided to collect and remove standing water located outside the proposed dam area. Drawings illustrating new Dam C project features are included in this appendix as Exhibit A. An existing waterline will be removed and relocated, as it is currently situated within the dam's reservoir area. See Section 1.5 of this write-up for more detailed site development information.

Due to ongoing design, the Dam C embankment section has changed since the time of the Agency Technical Review (ATR). This write-up and referenced Dam C quantities reflect the current design conditions.

1.2 Existing Conditions

The project site is located at Hatch in the south-central portion of the New Mexico, approximately 37 miles north of the City of Las Cruces, New Mexico. The proposed dam is situated within an open field located on the south side of the town.

Several existing features are located within the proposed footprint of the dam and reservoir. An existing waterline is located within the eastern end of the proposed dam's reservoir area. The water line crosses the field in the northeast-southwest direction. An existing spoil levee, approximately 700 feet in length, is located near the easternmost portion of the proposed dam embankment.

Several existing features are located outside the footprint of the dam and reservoir, some of which may be impacted to accommodate new dam construction. An existing sanitary sewer lift station is located near the proposed dam's northwest embankment footprint (near dam station 23+00A). A 15 foot clearance is provided between the lift station boundary fencing and the closest dam embankment toe. An existing overhead power line runs parallel with the south side of Chonte Road. An existing power pole will be located near the northernmost embankment of the proposed dam. The Rodey Lateral and the Colorado Drain are located northeast of the proposed new dam.

1.3 Survey

The existing conditions topographic mapping illustrated on the Dam C drawings (Exhibit A, this appendix) is based on mapping obtained from the Doña Ana County Flood Commission. The Doña Ana County Flood Commission mapping was generated from a topographic survey conducted in 2004. The horizontal datum is NAD83 and the vertical datum is NAVD 88. Map coordinates are NM State Plane, Central Zone, U.S. feet. North arrow and bearings are based on grid coordinates. Elevations are in feet and contours are at 1 foot intervals. Distances are grid distances. The grid-to-ground scale factor is 0.99990909.

1.4 Demolition and Relocations

The waterline (referenced in Section 1.2 of this write-up) will be removed and relocated (as part of the dam construction contract) to accommodate new dam construction. The existing Rodey Lateral embankments (located northeast of the proposed dam) will be removed and replaced as required to install the new dam's outlet works conduit. To accommodate new construction, the proposed borrow area (the dam's reservoir area) will require clearing and grubbing to remove all organic material from the site. The existing spoil levee (referenced in Section 1.2 of this write-up) will be removed in its entirety as part of the new dam construction contract. If removed earth material meets associated specification requirements, it will be utilized as fill for new dam construction; if it does not meet associated requirements it will become waste material and removed from the construction site. It is unclear whether the existing power pole (referenced in Section 1.2 of this write-up) will have to be relocated, until a current planimetric/topographic/utility survey is obtained.

1.5 Site Development

1.5.1 Dam Section

Dam C is approximately 4191 feet in length with a 20 foot crest width (typically at elevation 4075.60) and 1V:3H exterior side slopes. Dam C is approximately 22.6 feet high at its highest point (near the outlet works). A double barrel box culvert is located below the east end of the dam, to allow flows from Spring Canyon Channel to enter. The typical dam section consists of a central semi-impervious earth core (10 feet wide at top) surrounded by random fill material; soil cement layer side slopes at reservoir side; gravel layer (6 inches thick) side slopes at non-reservoir side; a 20 foot wide by 6 inch thick soil cement cap (at top of dam); and an inspection trench. At higher sections of the dam (from station 17+00A to 32+75A), a sub-surface drainage blanket and toe drain system (refer to the Geotechnical Appendix) are located at the bottom of the non-reservoir dam embankment.

The dam section near Spring Canyon Channel has a crest elevation of 4078.5 and soil cement side slopes at both sides of the dam. The higher crest elevation at this location is provided to ensure that the probable maximum flood (PMF) from Spring Canyon Channel does not enter Dam C by overtopping its crest. The soil cement at the non-reservoir side of the dam is provided as erosion protection to accommodate the Spring Canyon Channel/culvert overtopping described

in Section 1.5.5 of this write-up. Refer to the Dam C project drawings (included in the Civil Engineering Appendix, as Exhibit A) for detailed dam section information.

1.5.2 Dam Spillway

A 350 foot wide spillway (with a crest elevation of 4067.7) is centered at station 35+13.40A of the dam alignment and is constructed of roller compacted concrete (RCC). The sides of the spillway (from spillway crest to top of dam) are also constructed of RCC and have a 1V:1H exterior side slope. The dam section immediately upstream of the spillway has RCC extending 2 feet below the spillway crest and soil cement below this. The dam section immediately downstream of the spillway is constructed entirely of RCC, and has a 40 foot long RCC apron.

1.5.3 Dam Outlet Works

The dam outlet works (located near dam station 32+33A) are constructed of concrete and will convey reservoir flows into the Colorado Drain. The outlet works will be approximately 307 feet in length and consist of an intake tower, a gatewell structure, a rectangular conduit with manhole access (located approximately two thirds of the way down the conduit length), and a retaining wall with concrete and wire wrapped riprap aprons at the downstream end of the conduit. Finished grades at the outlet works intake tower will be excavated approximately 6 feet below existing grades to accommodate the tower and reservoir invert elevation at this location.

1.5.4 Dam Reservoir

The random fill material needed for the construction of the new dam will come from borrow located within the dam's reservoir area. New grades within the dam's reservoir area have a low point (approximately elevation 4053) adjacent to the outlet works intake tower and slope upward (at approximately 1%) into the reservoir area in a radial fashion for a distance of approximately 900 feet. If the reservoir area is excavated to the design capacity of 283 acre-feet, approximately 16% of the needed random fill material will be imported (with the current dam and spillway configuration). If the reservoir area is excavated to the maximum extent feasible (beyond the 283 acre-feet design capacity), some soil waste will be generated. Existing sub-surface soil conditions limit the amount of excavation within the reservoir area to a maximum dam storage capacity of approximately 305 acre-feet. The difference between excavation and fill material quantities will be optimized during the Plans and Specification design stage to balance associated volumes. Refer to the Geotechnical Appendix for potential project borrow sites, should they be needed.

1.5.5 Spring Canyon Channel

A new trapezoidal channel will collect/divert flows from Spring Canyon and convey them into the new dam's reservoir. The new trapezoidal channel is approximately 1,319 feet in length and has 1V:3H side slopes. The trapezoidal channel transitions to a double barrel concrete box culvert (located below the east dam embankment) to allow flows from Spring Canyon Channel to enter the dam. Downstream of the box culvert (interior to the dam), the channel transitions back to trapezoidal and extends to the excavation area associated with the dam's reservoir. Each barrel of the culvert is 5' high by 9'wide.

The culverts and channel are sized to allow flows below the 0.2% annual chance exceedance flood event to enter the dam. The channel and box culvert system have a minimum capacity of 870 cubic feet per second. Flows in excess of this flood event will pool upstream of the culvert, overtop the northeast side of the channel (at the non-reservoir side of the dam), and pass to the northeast. Armoring of the non-reservoir side of the dam at this location, and the channel configuration (higher southwest side slopes) and integral apron (at northeast channel side slope) are designed to protect these structures during channel overtopping events.

1.5.5.1 Channel Sections Upstream of Intersecting Dam Embankment

The upstream end of Spring Canyon Channel (approximately a 150 foot long portion) is constructed of RCC to accommodate the higher velocities associated with the steeper channel invert slope located here. The portion of the channel between the upstream RCC section and the transition to box culvert at the dam is constructed of soil cement. The typical soil cement channel section at this location has a 10 foot wide invert and has side slopes that are 5.5 feet high. The typical channel section transitions to a soil cement apron section that has: 8 foot high southwest side slopes; 6’ high northeast side slopes; and a 25’ wide apron (constructed integral with top of the northeast side slope). The channel apron section is located just upstream of the box culvert; is approximately 200 feet long; and accommodates the hydraulic conditions associated with the overtopping of the channel at this location. Refer to the Dam C project drawings (included in the Civil Engineering Appendix, as Exhibit A) for detailed Spring Canyon Channel section information.

1.5.5.2 Channel Sections Downstream of Intersecting Dam Embankment

The typical channel section downstream of the box culvert (at the dam) has a 20 foot wide invert and has side slopes that are 5 feet high. This section transitions as required to accommodate a 100 foot wide by 50 foot long apron at the downstream end of the channel within the dam reservoir. Approximately the upstream half of this section of channel is constructed of soil cement. The downstream half, from the soil cement portion to the apron within the reservoir, is constructed of riprap. Riprap sections are 2 feet thick, over a 6 inch thick layer of bedding material and filter fabric. To dissipate energy from channel flows before they enter the reservoir, large diameter riprap is utilized at the downstream portion of the channel, the transition to the apron, and at the apron itself. Refer to the Dam C project drawings (included in the Civil Engineering Appendix, as Exhibit A) for detailed Spring Canyon Channel section information.

1.5.6 Maintenance Roads

A new road will be provided on each side of the new dam (for operation and maintenance purposes) and two ramps are provided to access the top of the dam.

1.6 Access and Staging Area

Construction access to the project site will be from Chonte Road, which connects directly to 6th street, which in turn connects to New Mexico State Highway 26. Chonte Road is located north of the proposed dam. From Chonte Road, construction access will be from Recuerdos Road and

then Tepache Road. Both roads are located on the west side of the proposed dam. The Contractor's Staging Area will be located on the south side of the excavation associated with the proposed dam's reservoir area.

1.7 Grading

The site is graded as required to drain local runoff away from the new dam embankments. The dam's reservoir area is graded as required to divert all surface runoff to the outlet works intake structure; and as required to provide the dam's design storage capacity. The footprint of the new dam will be cleared and grubbed of all organic material and then compacted to accommodate the new earth embankment (dam). The access roads on either side of the dam embankment are graded to provide a level driving surface.

1.8 Erosion Protection

Soil cement will protect the dam crest and the side slopes at the reservoir side of dam. Gravel material (6 inches thick) will serve as erosion protection at the side slopes of the non-reservoir side of dam. Additional erosion protection is provided on the side slopes of the non-reservoir side of the dam, via soil cement, where Spring Canyon Channel intersects the dam. Roller compacted concrete will serve as erosion protection at the dam spillway and associated downstream apron. Spring Canyon Channel is constructed of roller compacted concrete, soil cement, or riprap, which will all serve as the channel's erosion protection. A concrete apron and 12-inch thick wire wrapped riprap will provide erosion protection where the dam's outlet works conduit and 24-inch storm drain pipe empty into the Colorado Drain.

1.9 Storm Drain Line

A ponding area will form between; the new dam embankment (approximately between stations 20+00A and 25+00A), existing Chonte Road, and an existing ridge located south of Chonte Road and west of referenced dam embankment. A storm drain line (approximately 1,684 feet long), consisting of 24-inch diameter pipe and manholes, is provided to eliminate standing water at this location. Manholes are located within the storm drain line at all alignment bends, and at a 500 foot maximum spacing. The three upstream-most manholes (located within the runoff ponding area) are drop inlet manholes. The storm drain line outfall discharges into the Colorado Drain, adjacent to the outlet works conduit outfall. A new headwall is located at the downstream end of the storm drain line. The dam's sub-surface drainage blanket and toe drain system (from station 17+00A to 32+75A) discharges into the storm drain line at each manhole location.

1.10 Utilities

Refer to Sections 1.2 and 1.4 of this write-up for information related to the removal and relocation of existing utilities required to accommodate the new dam construction. The existence of additional utilities within the dam embankment footprint or within the dam's reservoir area is

unknown. A current planimetric/topographic/utility survey will be obtained and used for design and development of drawings during the plans and specifications design stage of this project.

1.11 Fencing

A new chain-link fence will surround the perimeter of the new dam and reservoir. The fence is placed on the non-reservoir side of the dam (enclosing the dam's access road) and extends to high ground (located near the southeast side of the dam reservoir). The fence also encloses the portion of Spring Canyon Channel located exterior to the dam. Gates are provided as needed for vehicular access to the new dam. Temporary fencing will also be provided at the contractor's staging area.

1.12 Turf and Landscaping

All disturbed areas (i.e., the borrow area within the dam's reservoir area, the staging area, and etc…) will be seeded with grass to prevent erosion.

1.13 Quantities

Three dam design alternatives (Dam A, Dam B, and Dam C), with differing design capacities, were considered for this project. Associated quantities were developed for each of these alternatives. Refer to the Hydrology and Hydraulics Appendix for information related to each dam's design capacity. The outlet works and storm drain line design/quantities essentially remained the same for all three alternatives. Dam C was designated the selected alternative and various associated quantities are illustrated in Section 2 of this write-up. The illustrated Dam C quantities reflect the embankment changes that have occurred since the ATR. The quantities associated with Dam C are reflected in the associated MCACES cost estimate located in the Cost Engineering Appendix. For Dam A and for Dam B, all the earth fill material needed for the construction of the new dams comes from borrow located within these dam's reservoir areas. Both Dam A and Dam B will have excess reservoir excavation/spoil material that will have to be disposed. It will be possible to balance excavation and fill quantities for Dam C if the dam's reservoir is over excavated between the design capacity (283 acre-feet) and the maximum extent feasible (305 acre-feet). See Section 1.5.4 above for additional related information.

Quantities for each dam design alternative were generated in the manner specified below. Bentley InRoads design software was utilized to model all components for the following: the dam (except the outlet works); Spring Canyon Channel; and the fill material between the dam embankment and Rodey Lateral. Models for the dam embankment, dam spillway, and for the new channel utilized templates representing all applicable section components (i.e., random fill, soil cement, roller compacted concrete, semi-impervious fill, riprap, and gravel surfacing). Once the project feature (i.e., dam embankment, channel section, and etc…) was accurately modeled, associated component volumes were generated from InRoads design software via two different methods (triangle volume and end-area-volume methods). Cross-sections for modeled project features were generated, checked for accuracy, and compared with associated end-area-volume

data. Quantities for other project features (i.e., outlet works, storm drain line, and etc…) were generated from data contained within the Dam C drawings (included in the Civil Engineering Appendix as Exhibit A). Quantity calculations/tables for all three dam alternatives are included in the Civil Engineering Appendix as Exhibit B.

Dam C quantity calculations/tables reflecting the updated Dam C embankment section are included in the Civil Engineering Appendix as Exhibit C.

1.14 CADD

The following computer-aided design and drafting (CADD) software was used in developing the digital terrain models, new topography, and drawings:

MicroStation/V8
Bentley InRoads

The following standards were used in developing drawings:

A/E/C (Architectural/Engineering/Construction)
CADD (Computer-Aided Design and Drafting) Standards

2 - SECTION 205 - HATCH NEW MEXICO - SUMMARY OF DAM C PROJECT FEATURES

Illustrated material volumes are not adjusted for compaction and swell.

2.1 Spillway

Maximum capacity at spillway crest..... 283 acre-feet (456,573 cu yd)
Spillway cross section..... Trapezoidal
Construction.....Roller Compacted Concrete
Spillway length (parallel to dam alignment).....350 feet
Spillway crest width (perpendicular to dam alignment).....74 feet
Spillway width (including downstream apron).....123 feet
Spillway crest elevation .....4067.7 feet

2.2 Dam

2.2.1 EMBANKMENTS

Length of dam embankment .....4,191 feet
Embankment crest width.....20 feet
Side slopes – exterior embankment slopes 3H:1V
Maximum height of embankment.....22.6 feet
Maximum footprint of dam.....147 feet
Typical top of dam elevation (top of 6 inch soil cement cap) .....4075.60 feet
Typical top of dam fill material (below 6inch soil cement cap) .....4075.10 feet
Toe of dam elevation ..... Varies
Sediment pool capacity.....30 acre-feet
Water pool capacity .....253 acre-feet
Random fill volume for dam embankment .....84,399 cu yd
Semi-impervious fill volume for dam embankment .....39,990 cu yd
Drainage blanket material.....9,331 cu yd
Soil cement fill volume for dam embankment.....22,553 cu yd
Roller compacted concrete fill volume (at spillway).....2,731 cu yd
Gravel slope protection fill volume for dam embankment .....2,714 cu yd
Excavation volume for dam embankment .....24,069 cu yd

2.2.2 OUTLET WORKS

Outlet conduit size (average outside dimensions) .....5.0 feet x 8.0 feet
Outlet conduit size (inside dimensions).....3.0 feet x 5.0 feet
Intake tower rim elevation .....4064.0 feet
Intake tower invert elevation .....4053.0 feet
Outlet conduit outfall elevation (invert) .....4051.28 feet
Conduit length.....306.9 feet
Gatewell structure conduit size (at gate).....3.0 feet x 7.0 feet
Excavation volume for dam outlet works .....3,218 cu yd
Random fill volume for dam outlet works.....1,086 cu yd

2.3 Channel (at Spring Canyon)

Length of channel (including portion within dam).....1,319 feet
Channel bottom width (upstream of dam) .....10 feet
Channel bottom width (downstream of dam) .....20 feet
Top of channel width ..... Varies
Channel side slopes - cut slopes.....3H on 1V
Riprap apron dimension (at downstream of channel within dam).....100’W x 50’L
Design channel capacity (minimum) .....870 cfs
Random fill volume for channel section.....2,469 cu yd
Soil cement fill volume for channel section .....4,725 cu yd
Roller compacted concrete fill volume for channel section (at upstream end).....605 cu yd
Riprap fill volume for channel section (at downstream end and at apron).....1, 303 cu yd
Excavation volume for channel .....11,461 cu yd

2.4 Miscellaneous

2.4.1 FILL AREA BETWEEN RODEY LATERAL AND DAM

Fill area volume .....8,379 cu yd

2.4.2 RESERVOIR GRADING

Excavation volume for dam reservoir (at 283 AF storage).....113,753 cu yd
Maximum excavation volume for dam reservoir (at 305 AF storage).....149,408 cu yd
Random fill volume for dam reservoir.....1,698 cu yd

2.4.3 STORM DRAIN LINE

Length of storm drain line.....1,684 feet
Storm drain line pipe diameter.....24 inch
Number of manholes/inlets.....6
Excavation volume for storm drain line.....4,440 cu yd
Random fill volume for storm drain line .....4,240 cu yd

Small Flood Risk Management Project Hatch, NM

EXHIBIT A - DAM C FEASIBILITY DRAWINGS

December 2016

US Army Corps of Engineers
Albuquerque District

DOÑA ANA COUNTY, NEW MEXICO

VILLAGE OF HATCH

PLANS FOR

SECTION 205 – HATCH NEW MEXICO DAM C – FEASIBILITY DRAWINGS (EXHIBIT A OF APPENDIX J)

SOLICITATION NO.: W912PP–XX–X–XXXX

DATED : DECEMBER 2016

United States Army
Corps of Engineers
...Serving the Army
...Serving the Nation

Albuquerque District

Zero Accidents
Zero Tolerance

THE DESIGN, ASSOCIATED DETAILS, AND PRESENTATION CONCEPTS IN THIS SET OF DRAWINGS WERE ASSEMBLED AND REVIEWED BY THE FOLLOWING ALBUQUERQUE DISTRICT DESIGN TEAM. THIS DOCUMENT MEETS OUR HIGH STANDARDS OF QUALITY AND PROFESSIONALISM.

TEAM MEMBER	SIGNATURE	FUNCTION
CIVIL		
TED SOLANO		CIVIL ENGINEER
GARY EDWARDS		ENGINEERING TECHNICIAN
RONNIE CASAUS		ENGINEERING TECHNICIAN
ADAM MAESTAS		ENGINEERING TECHNICIAN
GEOTECHNICAL		
MICHAEL MILLS, P.E.		CIVIL ENGINEER
CHARLES LITTLE		ENGINEERING TECHNICIAN
STRUCTURAL		
RICHARD ZARAGOZA, P.E.		STRUCTURAL ENGINEER
LANCE FAERBER		STRUCTURAL TECHNICIAN
HYDROLOGY & HYDRAULICS		
STEVE BOBERG		HYDRAULIC ENGINEER
ENVIRONMENTAL ENGINEERING		
DAVID HENRY		ENVIRONMENTAL ENGINEER
ENVIRONMENTAL RESOURCES		
DANIELLE GALLOWAY		BIOLOGIST
JEREMY DECKER		ARCHAEOLOGIST
COST ENGINEERING		
TIM TETRICK		COST ESTIMATOR
PROJECT MANAGEMENT		
LYNETTE GIESEN		PROJECT MANAGER

SIGNATURES AFFIXED BELOW INDICATE OFFICIAL RECOMMENDATION AND APPROVAL OF ALL DRAWINGS IN THIS SET AS INDEXED.

SUBMITTED:	APPROVED:
CHIEF, DESIGN BRANCH	CHIEF, ENGINEERING AND CONSTRUCTION DIVISION

THIS PROJECT WAS DESIGNED BY THE U.S. ARMY CORPS OF ENGINEERS ALBUQUERQUE DISTRICT. THE INITIALS OR SIGNATURES AND REGISTRATION DESIGNATIONS OF GOVERNMENT INDIVIDUALS APPEAR ON THESE PROJECT DOCUMENTS WITHIN THE SCOPE OF THEIR EMPLOYMENT AS REQUIRED BY ER 1110-1-8152.

SECTION 205 - HATCH NEW MEXICO - DAM C

ABBREVIATIONS

AB	ANCHOR BOLT, ABOVE
ACOUS'T	ACOUSTICAL
ACI	AMERICAN CONCRETE INSTITUTE
A/C	AIR CONDITIONING
AD	AREA DRAIN
ADH	ADHESIVE
ADJ	ADJACENT
ADJT	ADJUSTABLE
AFF	ABOVE FINISHED FLOOR
AFG	ABOVE FINISHED GROUND
AGG	AGGREGATE
AHU	AIR HANDLING UNIT
AISC	AMERICAN INSTITUTE OF STEEL CONSTRUCTION
AISI	AMERICAN IRON STEEL INSTITUTE
ALUM	ALUMINUM
A.L.	ACOUSTIC LINING
ALT	ALTERNATE
A., AMP	AMPERE
ANC	ANCHOR(AGE)
ANOD	ANODIZE(D)
ANSI	AMERICAN NATIONAL STANDARDS INSTITUTE
APPVD	APPROVED
APX	APPROXIMATE
ARCH	ARCHITECT(URAL)
ASB	ASBESTOS
ASPH	ASPHALT
AT.	ASPHALT TILE
AUTO	AUTOMATIC
BALAN	BALANCING
BBD	BULLETIN BOARD
BD	BOARD
BET.	BETWEEN
BIT.	BITUMINOUS
BLDG	BUILDING
BLK, BLKG	BLOCK, BLOCKING
BM	BENCH MARK, BEAM
BOF	BOTTOM OF FOOTING
BOTT	BOTTOM
BR	BEDROOM
BRG	BEARING, BRIDGING
BRK	BREAKER, BRICK
BS	BELL & SPIGOT
BSMT	BASEMENT
BSTR	BOOSTER
B.T.U.	BRITISH THERMAL UNIT
B/U	BUILT UP
BW	BOTH WAYS
BYP	BYPASS
C	CONDUIT
CA	COMPRESSED AIR
CAB.	CABINET
CAD	CADMIUM
CALC	CALCAREOUS
CAP.	CAPACITOR
CB	CATCH BASIN
CCW	COUNTER CLOCKWISE
CEM	CEMENT
CENT	CENTRIFUGAL
CFCI	CONTRACTOR FURNISHED, CONTRACTOR INSTALLED
CFH	CUBIC FEET PER HOUR
CFM	CUBIC FEET PER MINUTE
CFT	CUBIC FOOT
CG	CORNER GUARD
CHW	
CI	CAST IRON
CJ	CONSTRUCTION JOINT
CKT	CIRCUIT
CL, ℄	CENTER LINE
CLG	CEILING
CLOS	CLOSET
CLR	CLEAR, CLEARANCE
CM	CENTIMETER
CMP	CORREGATED METAL PIPE
CMU	CONCRETE MASONRY UNIT
CNT	CENTER, CENTRAL
CO.	COMPANY
COEF	COEFFICIENT
COL	COLUMN
COMB	COMBINATION
COMP	COMPRESS(ED, ION, IBLE)
CONC	CONCRETE
CONST	CONSTRUCTION
CONT	CONTINUOUS, CONTINUE, CONTROL
CONTR	CONTRACT(OR), CONTRACTION
CORR	CORRIGATED, CORRIDOR
CRS	COURSE(S), CORROSION RESISTANT STEEL
CS	COUNTERSINK
CT	CERAMIC TILE
CTR	COUNTER
CTSK	COUNTERSINK SCREW
CU	CUBE, CUBIC
CU. YD.	CUBIC YARD
CX	CONNECTION
CY	CYCLE
CYD	CUBIC YARD
CYL	CYLINDER
3C	3 CONDUCTOR CABLE
D	DEEP, DEPTH
DA	DOUBLEACTING
DB	DRY BULB
D.C.	DIRECT CURRENT
DEG	DEGREE
DEM	DEMOLISH, DEMOLITION
DEPT	DEPARTMENT
DET	DETAIL
DF	DRINKING FOUNTAIN
DH	DOUBLE HUNG
DIAG	DIAGONAL
DIAM, DIA	DIAMETER
DIFF	DIFFERENTIAL
DIM	DIMENSION
DISC	DISCONNECT
DISCH	DISCHARGE
DISP	DISPOSAL
DIV	DIVISION
DL	DEAD LOAD
DN	DOWN
DOM	DOMESTIC
DPR	DAMPER
DR	DOOR
DS	DOWNSPOUT, DOOR STOP
DT	DRAIN TILE
DTL	DETAIL
DWG	DRAWING
DWR	DRAWER
E	EAST
EA	EACH
EC	EVAPORATIVE COOLER
EF	EACH FACE
EIFS	EXTERIOR INSULATION FINISH SYSTEM
ELEC	ELECTRIC(AL)
	ELEVATOR, ELEVATION
EMER	EMERGENCY
EMT	ELECTRIC METAL TUBING
ENCL	ENCLOSE, ENCLOSURE
ENGR	ENGINEER
ENT	ENTRANCE
EP	ELECTRICAL PANELBOARD
EQ	EQUAL
EQUIP	EQUIPMENT
EST	ESTIMATE
EW	EACH WAY
EWC	ELECTRIC WATER COOLER
EXCAV.	EXCAVATE, EXCAVATING
EXIST	EXISTING
EXH	EXHAUST
EXP	EXPOSED, EXPANSION
EXS	EXTRA STRONG
EXT	EXTERIOR
F	FAHRENHEIT
FA	FIRE ALARM
FAB	FABRICATE
FAC	FACILITY
FB	FACE BRICK
FC	FAN COIL
FD	FLOOR DRAIN
FDN	FOUNDATION
FE	FIRE EXTINGUISHER
FEC	FIRE EXTINGUISHER CABINET
FF	FINISHED FLOOR, FAR FACE
FHMS	FLATHEAD MACHINE SCREW
FHS	FIRE HOSE STATION
FHWS	FLATHEAD WOOD SCREW
FIBERB'D	FIBER BOARD
FIN	FINISH(ED)
FIX.	FIXTURE
FLA	FULL LOAD AMPHERES
FLEX	FLEXIBLE
FLG	FLASHING
FLR	FLOOR(ING)
FLUOR	FLUORESCENT
FN	FULL NEUTRAL
FP	FIREPROOF
FR	FRAME(D), FRAMING
FS	FULL SIZE, FLOOR SINK
FT	FOOT, FEET
FTG	FOOTING
FU	FUSE
FUR	FURRED, FURRING
FUT	FUTURE
G	GAS
GA	GAGE, GAUGE
GAL	GALLON
GALV	GALVANIZED
GARB	GARBAGE
GB	GRAB BAR, GRADE BEAM
GC	GENERAL CONTRACT
GCMU	GLAZED CONCRETE MASONRY UNITS
GEN.	GENERAL
GFGI	GOVERNMENT FURNISHED, GOVERNMENT INSTALLED
GKT	GASKET(ED)
GL	GLASS, GLAZING
GOVT	GOVERNMENT
GP	GALVANIZED PIPE
GPD	GALLONS PER DAY
GPH	GALLONS PER HOUR
GPM	GALLONS PER MINUTE
GR	GRADE
GRD	GROUND
GRTG	GRATING
GSU	GLAZED STRUCTURAL UNIT
GT	GROUT
GWB	GYPSUM WALL BOARD
GYP	GYPSUM
H	HIGH
HB	HOSE BIB
HBD	HAND BALANCING DAMPER
HC	HOLLOW CORE
HD	HEAVY DUTY
HDR	HEADER
HDW	HARDWARE
HH	HAND HOLE
HID.	HIGH INTENSITY DISCHARGE
HM	HOLLOW METAL
HORIZ	HORIZONTAL
HP	HORSE POWER
HR	HOUR, HANDRAIL
HS	HIGH STRENGTH
HT	HEIGHT
HTG	HEATING
HTR	HEATER
HVAC	HEATING/VENTILATING/AIR CONDITIONING
HW	HOT WATER
HWH	HOT WATER HEATER
HWY	HIGHWAY
HX	HEXAGONAL
HYD	HYDRAULIC
ID	INSIDE DIAMETER
IDENT	IDENTIFICATION
IN.	INCH
INCIL	INCINERATOR
INCL	INCLUDE(D), INCLUDING
INSUL	INSULATE(D), INSULATION
INT	INTERIOR, INTERSECTION
INV	INVERT
IPS	IRON PIPE SIZE
IW	INDUSTRIAL WASTE
JAN	JANITOR
JC	JANITOR CLOSET
JCT	JUNCTION
JST	JOIST
JT	JOINT
K	KIP
KG	KILOGRAM
KIT	KITCHEN
KM	KILOMETER
KO	KNOCK-OUT
KPL	KICK PLATE
KSF	KIPS PER SQUARE FOOT
KSI	KIPS PER SQUARE INCH
KVA	KILOVOLT AMPS
KV	KILOVOLT
KW	KILOWATT
L, LG	LENGTH
LAB.	LABORATORY
LAM	LAMINATE
LAV	LAVATORY
LB	POUND
LC	LIGHT CONTROL
LGC	LIQUID GLAZE COATING
LH	LEFT HAND
LIQ	LIQUID
LL	LIVE LOAD
LLH	LONG LEG HORIZONTAL
LLV	LONG LEG VERTICAL
LP	LOW PRESSURE
LT	LIGHT
LV	LOW VOLTAGE
LW	LIGHTWEIGHT
LWC	LIGHTWEIGHT CONCRETE
M	METER(S), MOTOR
MACH.	MACHINE
MAINT	MAINTENANCE
MAN	MANUAL
MAS	MASONRY
MAX	MAXIMUM
MB	MACHINE BOLT
MBH	THOUSAND BTU PER HOUR
MBR	MEMBER, MEMBRANE
MC	MEDICINE CABINET
MECH	MECHANIC(AL)
MED	MEDIUM
MET	METAL
MEZZ	MEZZANINE
MFG	MANUFACTURE(R, ING)
MGT	MATTE GLAZED TILE
MH	MANHOLE
MI	MALLEABLE IRON
MIL.	MILITARY
MIN	MINIMUM, MINUTE
MIR	MIRROR
MISC	MISCELLANEOUS
MK	MARK
MM	MILLIMETER(S)
MN	MAIN
MO	MASONRY OPENING
MOD	MODULAR, MODEL
MOV	MOVABLE
MP	MEDIUM PRESSURE
MPH	MILES PER HOUR
MS	MASTER SWITCH, MAGNETIC STARTER
MT	METAL THRESHOLD
MTD	MOUNTED
MTG	MEETING
MTL	MATERIAL(S), METAL
MULL	MULLION
N	NORTH
NAT	NATURAL
NEC	NATIONAL ELECTRIC CODE
NEG.	NEGATIVE
NEMA	NATIONAL ELECTRICAL MFG ASSOCIATION
NF	NO FUSE, NEAR FACE
NIC	NOT IN CONTRACT
NK	NECK
NMT	NONMETALIC
NO.	NUMBER
NOM	NOMINAL
NR	NOISE REDUCTION, NOT REQUIRED
NRC	NOISE REDUCTION COEFFICIENT
NTS	NOT TO SCALE
OA	OUTSIDE AIR
OB	OPPOSED BLADE
OBS	OBSCURE
OC	ON CENTER
OD	OUTSIDE DIAMETER
OH	OVERHANG
OHMS	OVALHEAD MACHINE SCREW
OHWS	OVALHEAD WOOD SCREW
OP	OPAQUE
OPG	OPENING
OPH	OPPOSITE HAND
OPP	OPPOSITE
P	POLE
PAR	PARALLEL
PASS.	PASSAGE
PAV	PAVE(MENT, ED, ING)
PB	PUSH BUTTON
PCC	PRECAST CONCRETE
PCF	POUNDS PER CUBIC FOOT
PD	PRESSURE DROP
PE	PORCELAIN ENAMEL
PED	PEDESTAL
PERF	PERFORATE(D)
PERP	PERPENDICULAR
PFL	POUNDS PER LINEAL FOOT
PH	PHASE
PL, ⅊	PLATE
PLAM	PLASTIC LAMINATE
PLAS	PLASTER
PRIV	PRESSURE REDUCING VALVE
PSF	POUNDS PER SQUARE FOOT
PSI	POUNDS PER SQUARE INCH
PSIG	POUNDS PER SQUARE INCH GRAVITY
PT	POINT
PTD	PAPER TOWEL DISPENSER
PTR	PAPER TOWEL RECEPTOR
PVC	POLYVINYL CHLORIDE
PVMT	PAVEMENT
PWD	PLYWOOD
QT	QUARRY TILE, QUART
QTY	QUANTITY
QUAL	QUALITY
R	RISER
RA	RETURN AIR
RAD	RADIUS
RB	RESILIENT BASE
RCP	REINFORCED CONCRETE PIPE
RD	ROOF DRAIN, ROAD
REBAR	REINFORCING BAR
RED.	REDUCTION
REF	REFERENCE
REFR	REFRIGERATOR
REG	REGISTER
REINF	REINFORCE(D, ING)
REL	RELOCATE(D)
REQD	REQUIRED
RES	RESILIENT, RESERVE
RET	RETURN
REV	REVISION(S), REVISED
RF	ROOF
RH	RELATIVE HUMIDITY, RIGHT HAND
RLG	RAILING
RM	ROOM
RO	ROUGH OPENING
ROT.	ROTARY, ROTATE
ROW	RIGHT OF WAY
RPM	REVOLUTIONS PER MINUTE
RR	RAILROAD
RVS	REVERSE (SIDE)
S	SOUTH, SLOPE
SA	SUPPLY AIR
SAN	SANITARY
SAT.	SATURATE
SB	SPLASH BLOCK
SC	SCALE, SOLID CORE, SHOWER CURTAIN
SCH	SCHEDULE
SCR	SHOWER CURTAIN ROD
SD	SPLITTER DAMPER, STORM DRAIN
	SOAP DISPENSER
SDG	SIDING
SEC	SECOND
SECT	SECTION
SG	SHELF (GLASS)
SH	SOAP HOLDER
SHR	SHOWER
SHT	SHEET
SIM	SIMILAR
SMLD	SHELF (METAL, LIGHT DUTY)
SMS	SHEET METAL SCREWS
SN	SOLID NEUTRAL
SND	SANITARY NAPKIN & TAMPON DISPOSER
SNTD	SANITARY NAPKIN & TAMPON DISPENSER
SOG	SLAB ON GRADE
SOL	SOLENOID
SP	SOUND PROOF, SPARE, SINGLE POLE
SPCS	SPACING, SPACE, SPACES
SPEC	SPECIFICATION(S)
SPK	SPEAKER
SQ	SQUARE
SS	SANITARY SEWER
SST	STAINLESS STEEL
ST	STREET, SHUNT TRIP
STA	STATION
STD	STANDARD
STL	STEEL
STOR	STORAGE
STRUCT	STRUCTURAL
SUCT	SUCTION
SUSP	SUSPENDED, SUSPENSION
SW	SWITCH
SY	SQUARE YARD
SYM	SYMMETRY, SYMMETRICAL
SYN	SYNTHETIC
SYS	SYSTEM
T	TREAD
TB	TOWEL BAR
T&B	TOP AND BOTTOM
TBM	TEMPORARY BENCH MARK
TECH	TECHNICAL
TEL	TELEPHONE
TEMP	TEMPERATURE
T&G	TONGUE AND GROOVE
THK	THICK(NESS)
TOC	TOP OF CONCRETE
TOF	TOP OF FOOTING
TOL	TOLERANCE
TOS	TOP OF SLAB
TOW	TOP OF WALL
TP	TOWEL PIN
TRANS	TRANSFORMER
TSH	TOTAL SENSIBLE HEAT
TTD	TOILET TISSUE DISPENSER
T'STAT	THERMOSTAT
TV	TELEVISION
TYP	TYPICAL
UG	UNDERGROUND
UH	UNIT HEATER
UL	UNDERWRITER LAB
UR	URINAL
UTIL	UTILITY
V	VALVE, VENT, VOLT(S)
VB	VAPOR BARRIER
VCP	VITREOUS (VITRIFIED) CLAY PIPE
VCT	VINYL COMPOSITION TILE
VEL	VELOCITY
VENT	VENTILATOR
VERT	VERTICAL
VEST	VESTIBULE
VF	VINYL FABRIC
VG	VERTICAL GRAIN
VOL	VOLUME
VS	VENT STACK
VTR	VENT THRU ROOF
W	WEST, WATER, WIDTH, WATT(S)
W/	WITH
WB	WET BULB, WOOD BASE
WC	WATER CLOSET
WD	WASTE OIL
WH	WATER HEATER
WI	WROUGHT IRON
WIND.	WINDOW
WL	WIND LOAD
WM	WIRE MESH
W/O	WITHOUT
WP	WATERPROOF(ING), WEATHERROOF
	WORK POINT
WR	WATER REPELLENT, WASTE RECEPTACLE
WSCT	WAINSCOT
WT	WEIGHT
WWF	WELDED WIRE FABRIC
4W	4 WIRE
X	CROSS
YD	YARD
YR	YEAR

SYMBOLS

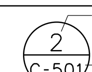

SECTION, DETAIL OR ELEVATION IDENTIFICATION NUMBER OR LETTER

NUMBER OF SHEET ON WHICH SECTION, DETAIL OR ELEVATION IS SHOWN

SECTION, DETAIL, OR ELEVATION DESIGNATION

INDEX OF DRAWINGS

SEQ. No.	SHT. No.	TITLE
1	G-001	COVER SHEET
2	G-002	INDEX OF DRAWINGS, ABBREVIATIONS, & SYMBOLS
3	G-003	SITE BOUNDARY PLAN, PROJECT LOCATION AND VICINITY MAPS

CIVIL

SEQ. No.	SHT. No.	TITLE
4	C-101	HORIZONTAL CONTROL
5	C-102	SITE PLAN
6	C-103	TYPICAL DAM SECTIONS
7	C-104	OUTLET WORKS - PLAN AND SECTIONS
8	C-105	SPILLWAY - PLAN AND SECTIONS
9	C-106	BOX CULVERT INLET - PLAN AND SECTIONS
10	C-107	SPRING CANYON CHANNEL - PLAN AND SECTIONS
11	C-108	STORM DRAIN LINE - PLAN AND PROFILE
12	C-109	ACCESS RAMPS - PLAN
13	C-110	MANHOLE AND HEADWALL DETAILS

SEQ. No.	SHT. No.	TITLE

US Army Corps of Engineers
Albuquerque District

Mark	Description	Date	Appr.

File Name: HT03S02G-002.DGN
Plot Scale: 8:1
Plot Date: OCTOBER 2015
SOL/CONTRACT NO.
PROJECT NO.
Zero Accidents / Zero Tolerance

DESIGN BY: SEE COVER
DRAWN BY: SEE COVER
REVIEWED BY: SEE COVER

U.S. ARMY ENGINEER DISTRICT
CORPS OF ENGINEERS
ALBUQUERQUE, NEW MEXICO

CHEIF, GENERAL ENGINEERING SECTION

VILLAGE OF HATCH DONA ANA COUNTY
SECTION 205 - HATCH, NEW MEXICO
DAM C

INDEX OF DRAWINGS, ABBREVIATIONS, & SYMBOLS

SHEET NO.
G-002
2 OF 3

SEQUENCE NO.
2

ATR BACKCHECK SET

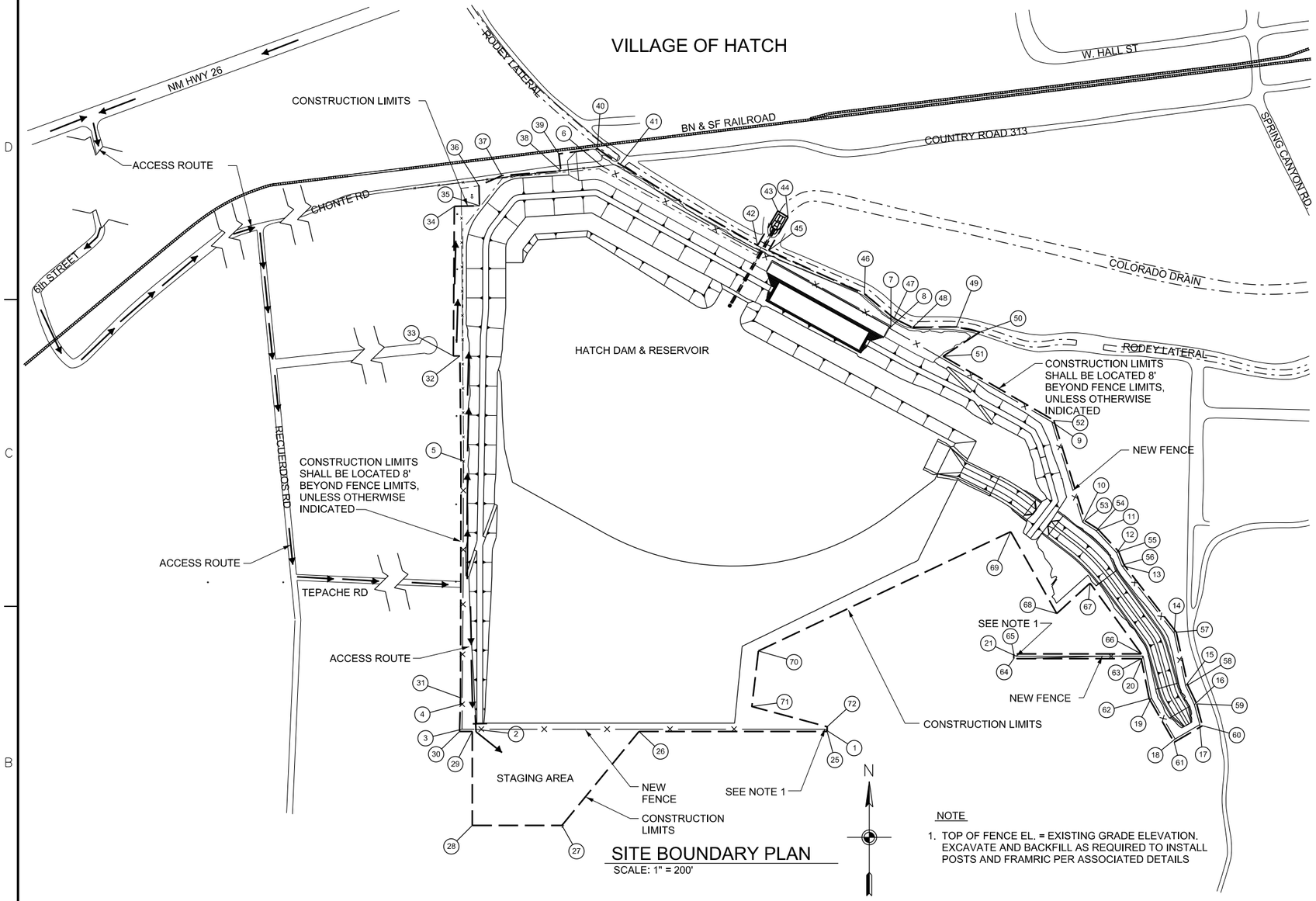

SITE BOUNDARY PLAN

SCALE: 1" = 200'

NOTE

1. TOP OF FENCE EL. = EXISTING GRADE ELEVATION. EXCAVATE AND BACKFILL AS REQUIRED TO INSTALL POSTS AND FRAMRIC PER ASSOCIATED DETAILS

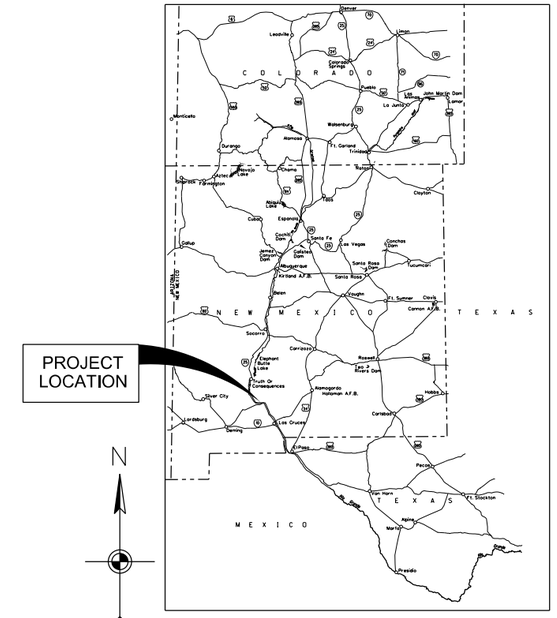

VICINITY MAP

NOT TO SCALE

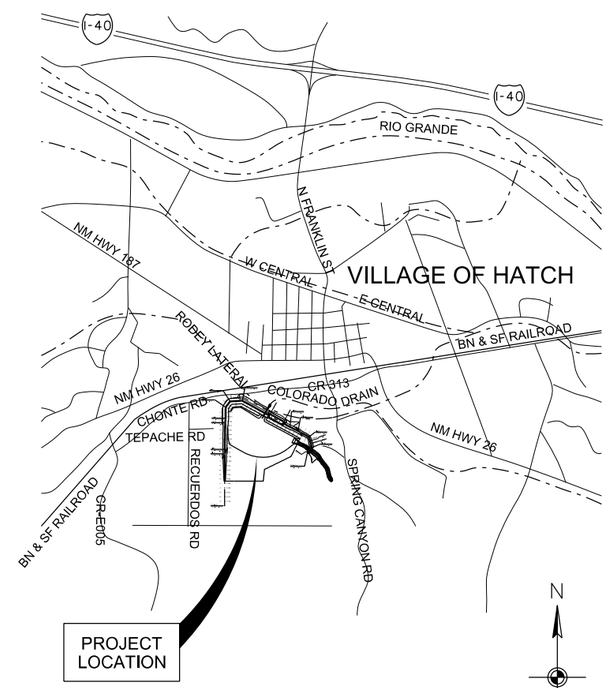

PROJECT LOCATION MAP

NOT TO SCALE

1" = 200' 0' 100' 200' 400' 600'

FENCE COORDINATES					
NO.	NORTHING	EASTING	NO.	NORTHING	EASTING
1	604,378.95	1,360,971.38	17	604,394.36	1,362,247.55
2	604,379.01	1,359,779.40	18	604,345.25	1,362,163.57
3	604,379.06	1,359,736.09	19	604,485.30	1,362,082.91
4	604,466.00	1,359,738.85	20	604,627.07	1,362,054.67
5	605,292.13	1,359,740.83	21	604,619.07	1,361,622.66
6	606,315.95	1,360,174.22			
7	605,751.06	1,361,195.93			
8	605,743.59	1,361,191.80			
9	605,424.62	1,361,744.04			
10	605,083.12	1,361,849.35			
11	605,054.00	1,361,894.90			
12	605,054.00	1,361,894.90			
13	604,934.98	1,361,982.09			
14	604,705.52	1,362,160.53			
15	604,526.37	1,362,199.21			
16	604,461.97	1,362,229.56			

CONSTRUCTION LIMITS								
NO.	NORTHING	EASTING	NO.	NORTHING	EASTING	NO.	NORTHING	EASTING
25	604,370.96	1,360,787.46	41	606,301.20	1,360,274.31	57	604,708.99	1,362,167.96
26	604,370.98	1,360,338.85	42	606,025.24	1,360,742.50	58	604,528.96	1,362,206.83
27	604,051.47	1,360,076.36	43	606,142.38	1,360,811.13	59	604,464.73	1,362,237.11
28	604,051.48	1,359,771.40	44	606,121.65	1,360,846.50	60	604,390.53	1,362,256.84
29	604,371.01	1,359,771.40	45	606,008.09	1,360,779.97	61	604,334.27	1,362,160.66
30	604,371.01	1,359,727.83	46	605,859.87	1,361,106.39	62	604,482.44	1,362,075.32
31	604,485.39	1,359,731.45	47	605,777.08	1,361,207.09	63	604,619.07	1,362,048.10
32	605,648.69	1,359,729.07	48	605,745.74	1,361,269.75	64	604,619.07	1,361,614.66
33	605,648.71	1,359,706.91	49	605,747.83	1,361,419.59	65	604,635.07	1,362,614.66
34	606,158.36	1,359,710.08	50	605,730.23	1,361,498.73	66	604,635.07	1,361,048.86
35	606,159.81	1,359,795.86	51	605,647.58	1,361,374.02	67	604,875.78	1,361,873.95
36	606,228.24	1,359,793.88	52	605,429.98	1,361,750.76	68	604,772.14	1,361,760.67
37	606,262.59	1,359,871.75	53	605,088.28	1,361,856.13	69	605,051.00	1,361,603.88
38	606,278.92	1,360,072.99	54	605,060.19	1,361,900.06	70	604,644.88	1,360,745.17
39	606,336.65	1,360,065.76	55	604,983.36	1,361,971.75	71	604,456.22	1,360,722.95
40	606,354.39	1,360,197.02	56	604,938.98	1,361,989.11	72	604,378.95	1,360,971.38

US Army Corps of Engineers
Albuquerque District

Mark	Description	Date	Appr.

File Name: HT035020-003.DGN
Plot Scale: 200:1
Plot Date: OCTOBER 2015
SOL/CONTRACT NO.
PROJECT NO.

Zero Accidents
Zero Tolerance

DESIGN BY: SEE COVER
DRAWN BY: SEE COVER
REVIEWED BY: SEE COVER

U.S. ARMY ENGINEER DISTRICT
CORPS OF ENGINEERS
ALBUQUERQUE, NEW MEXICO

CHIEF, GENERAL ENGINEERING SECTION

VILLAGE OF HATCH
SECTION 205 - HATCH, NEW MEXICO
DAM C
DONA ANA COUNTY

SITE BOUNDARY PLAN, PROJECT LOCATION AND VICINITY MAPS

SHEET NO.
G-003
3 OF 3

SEQUENCE NO.
3

ATR BACKCHECK SET

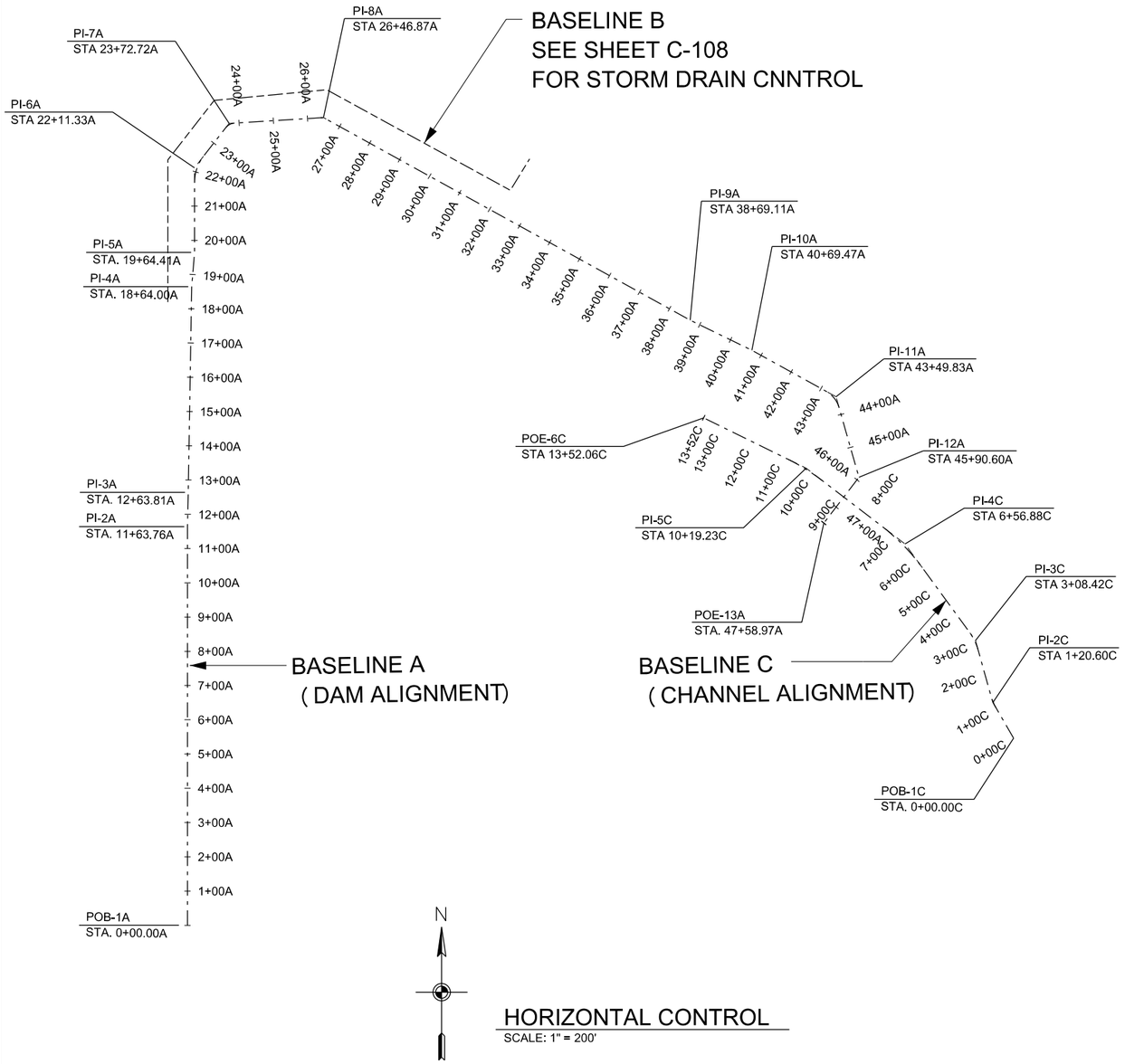

HORIZONTAL CONTROL

SCALE: 1" = 200'

BASELINE A

POB-1A	STA. 0+00.00A	N 603847.00	E 1359796.87
PI-2A	STA.11+63.76A	N 605010.76	E 1359796.87
PI-3A	STA. 12+63.81A	N 605110.79	E 1359799.02
PI-4A	STA. 18+64.00A	N 605710.90	E 1359808.89
PI-5A	STA. 19+64.41A	N 605810.97	E 1359817.10
PI-6A	STA.22+11.33A	N 606057.89	E 1359817.10

PC6A	STA. 21+68.35A	N 606014.91	E 1359817.10
PT6A	STA. 22+51.15A	N 606091.78	E 1359843.53
DELTA	37°57'09"		
DEGREE	45°50'12"		
RADIUS	125.00'		
TANGENT	42.98		
LENGTH	82.80		

PI-7A	STA.23+72.72A	N 606187.65	E 1359918.30

PC7A	STA. 23+56.97A	N 606175.23	E 1359908.61
PT7A	STA. 23+86.57A	N 606188.63	E 1359934.02
DELTA	48°27'41"		
DEGREE	163°42'08"		
RADIUS	35.00'		
TANGENT	15.75		
LENGTH	29.60		

PI-8A	STA.26+46.87A	N 606204.91	E 1360193.81

PC8A	STA. 26+38.12A	N 606204.37	E 1360185.07
PT8A	STA. 26+55.15A	N 606200.68	E 1360201.46
DELTA	32°31'27"		
DEGREE	190°59'09"		
RADIUS	30.00'		
TANGENT	8.75		
LENGTH	17.03		

PI-9A	STA. 38+69.11A	N 605613.29	E 1361263.86
PI-10A	STA. 40+69.47A	N 605525.37	E 1361443.90
PI-11A	STA.43+49.83A	N - 605389.93	E - 1361689.37

PC11A	STA. 43+16.48A	N 605406.04	E 1361660.17
PT11A	STA. 43+79.67A	N 605357.85	E 1361698.48
DELTA	45°15'32"		
DEGREE	71°37'11"		
RADIUS	80.00'		
TANGENT	33.35		
LENGTH	63.19		

PI-12A	STA. 45+90.60A	N 605154.95	E 1361756.11
POE-13A	STA. 47+58.97A	N 605021.30	E 1361653.69

BASELINE C

POB-1C	STA. 0+00C	N 604393.05	E 1362207.49
PI-2C	STA.1+20.60C	N 604497.40	E 1362147.04

PC2C	STA. 1+02.17C	N 604481.46	E 1362156.27
PT2C	STA. 1+38.83C	N 604515.15	E 1362142.08
DELTA	14°28'58"		
DEGREE	39°30'52"		
RADIUS	145.00'		
TANGENT	18.42		
LENGTH	36.65		

PI-3C	STA. 3+08.42C	N - 604678.49	E - 1362096.47

PC3C	STA. 2+81.24C	N 604652.31	E 1362103.78
PT3C	STA. 3+35.01C	N 604700.44	E 1362080.44
DELTA	20°32'23"		
DEGREE	38°11'50"		
RADIUS	150.00'		
TANGENT	27.18		
LENGTH	53.77		

PI-4C	STA. 6+56.88C	N 604960.36	E 1361890.61

PC4C	STA.5+70.44C	N 604890.56	E 1361941.59
PT4C	STA. 7+42.14C	N 605012.94	E 1361822.00
DELTA	16°23'45"		
DEGREE	9°32'57"		
RADIUS	600.00'		
TANGENT	86.44		
LENGTH	171.70		

PI-5C	STA. 10+19.23C	N 605181.48	E 361602.05

PC5C	STA. 9+59.95C	N 605145.42	E 1361649.10
PT5C	STA. 10+78.13C	N 605207.63	E 1361548.85
DELTA	11°17'04"		
DEGREE	9°32'57"		
RADIUS	600.00'		
TANGENT	59.28		
LENGTH	118.17		

POE-6C	STA. 13+52.06C	N 605328.48	E 1361303.02

NOTE:

1. GRID COORDINATES ARE IN NEW MEXICO STATE PLANE, CENTRAL ZONE, U.S. FEET. SEE SURVEY NOTE ON SHEET C-102 FOR ADDITIONAL INFO.

1" = 200' 0' 100' 200' 400' 600'

US Army Corps of Engineers
Albuquerque District

Mark	Description	Date	Appr.

File Name: HT05500C-101.DGN
Plot Scale: 200:1
Plot Date: OCTOBER 2015
SOL/CONTRACT NO.
PROJECT NO.
Zero Accidents Zero Tolerance

DESIGN BY: SEE COVER
DRAWN BY: SEE COVER
REVIEWED BY: SEE COVER

U.S. ARMY ENGINEER DISTRICT
CORPS OF ENGINEERS
ALBUQUERQUE, NEW MEXICO
CHIEF, GENERAL ENGINEERING SECTION

VILLAGE OF HATCH
SECTION 205 - HATCH, NEW MEXICO
DAM C
DONA ANA COUNTY

HORIZONTAL CONTROL

SHEET NO.
C-101
1 OF 10

SEQUENCE NO.
4

ATR BACKCHECK SET

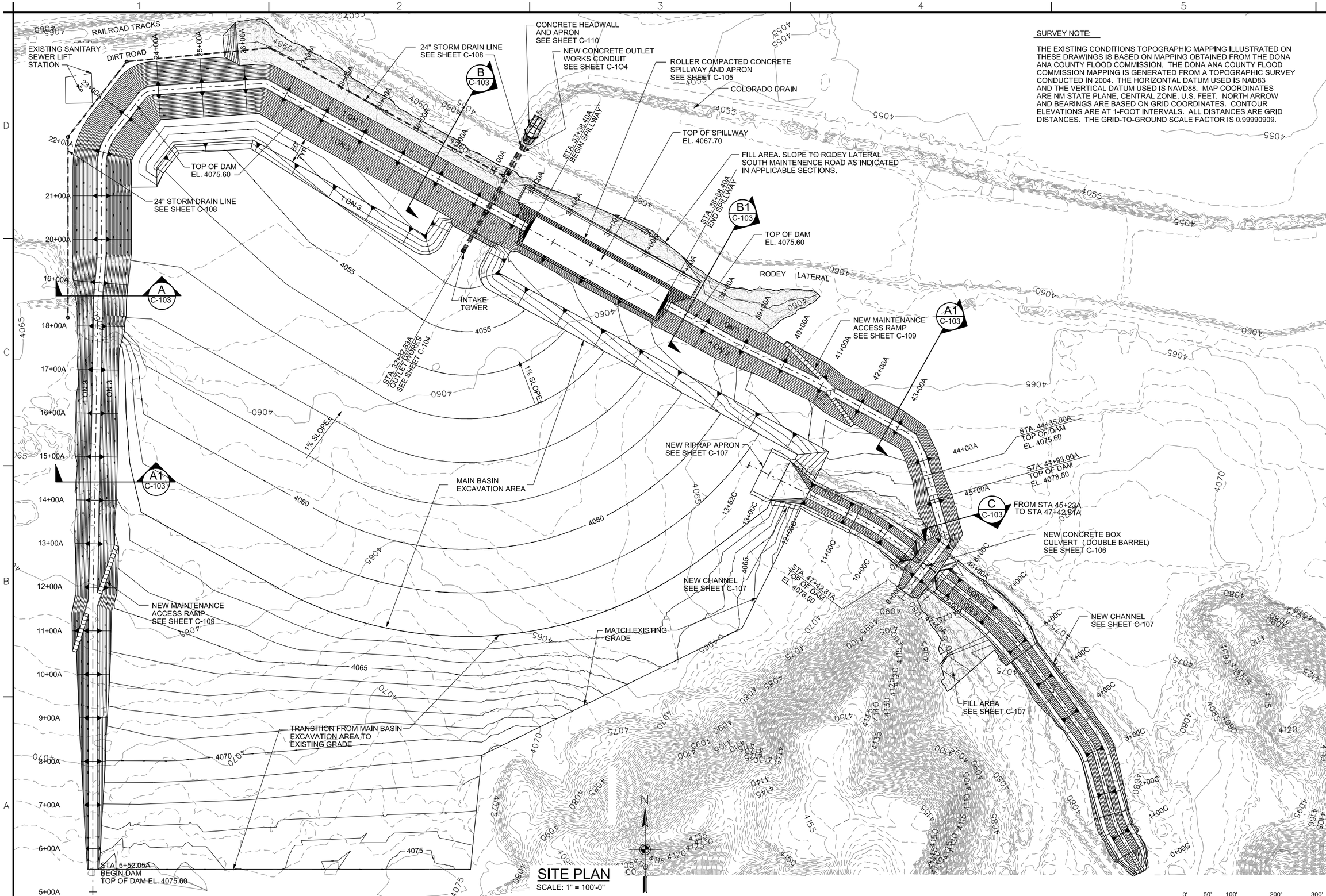

SURVEY NOTE:

THE EXISTING CONDITIONS TOPOGRAPHIC MAPPING ILLUSTRATED ON THESE DRAWINGS IS BASED ON MAPPING OBTAINED FROM THE DONA ANA COUNTY FLOOD COMMISSION. THE DONA ANA COUNTY FLOOD COMMISSION MAPPING IS GENERATED FROM A TOPOGRAPHIC SURVEY CONDUCTED IN 2004. THE HORIZONTAL DATUM USED IS NAD83 AND THE VERTICAL DATUM USED IS NAVD88. MAP COORDINATES ARE NM STATE PLANE, CENTRAL ZONE, U.S. FEET. NORTH ARROW AND BEARINGS ARE BASED ON GRID COORDINATES. CONTOUR ELEVATIONS ARE AT 1-FOOT INTERVALS. ALL DISTANCES ARE GRID DISTANCES. THE GRID-TO-GROUND SCALE FACTOR IS 0.99990909.

SITE PLAN

SCALE: 1" = 100'-0"

US Army Corps of Engineers
Albuquerque District

Mark	Description	Date	Appr.

File Name: HT05500C-102.DGN
Plot Scale: 100:1
Plot Date: OCTOBER 2015
SOL/CONTRACT NO.
PROJECT NO.
Zero Accidents Zero Tolerance

DESIGN BY: SEE COVER
DRAWN BY: SEE COVER
REVIEWED BY: SEE COVER

U.S. ARMY ENGINEER DISTRICT
CORPS OF ENGINEERS
ALBUQUERQUE, NEW MEXICO

CHIEF, GENERAL ENGINEERING SECTION

VILLAGE OF HATCH
SECTION 205 - HATCH, NEW MEXICO
DAM C

DONA ANA COUNTY

SITE PLAN

SHEET NO.
C-102
2 OF 10

SEQUENCE NO.
5

ATR BACKCHECK SET

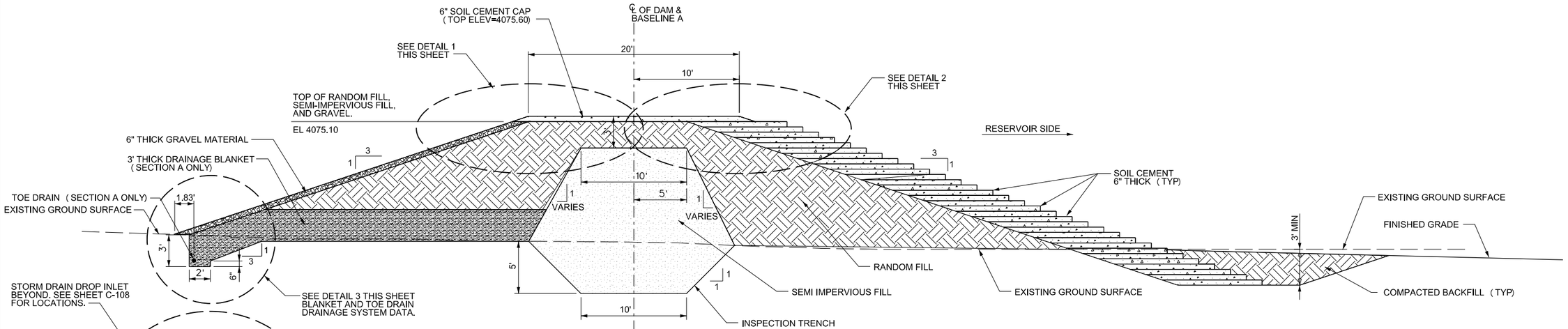

NOTE:
DRAINAGE BLANKET AND TOE DRAIN ARE ONLY PRESENT FROM STA. 17+00A TO STA. 32+75A. WHEN THESE ITEMS ARE NOT PRESENT, RANDOM FILL SHALL EXTEND TO EXISITNG GROUND SURFACE.

A C-103 / A1 C-103 SECTION
SCALE: 1"=5'-0"

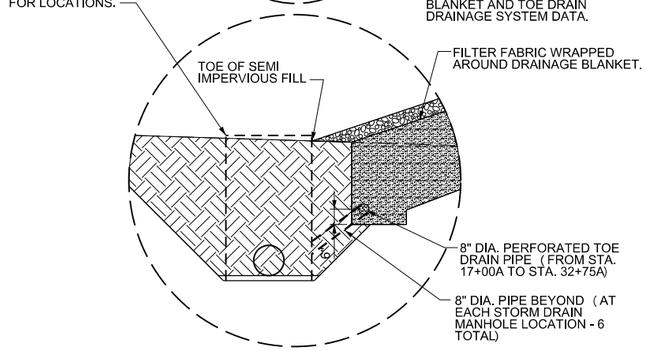

DETAIL 3 @ A ONLY
SCALE: NTS

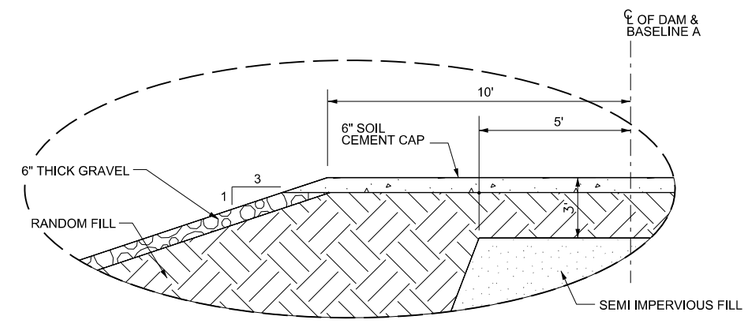

DETAIL 1
SCALE: NTS

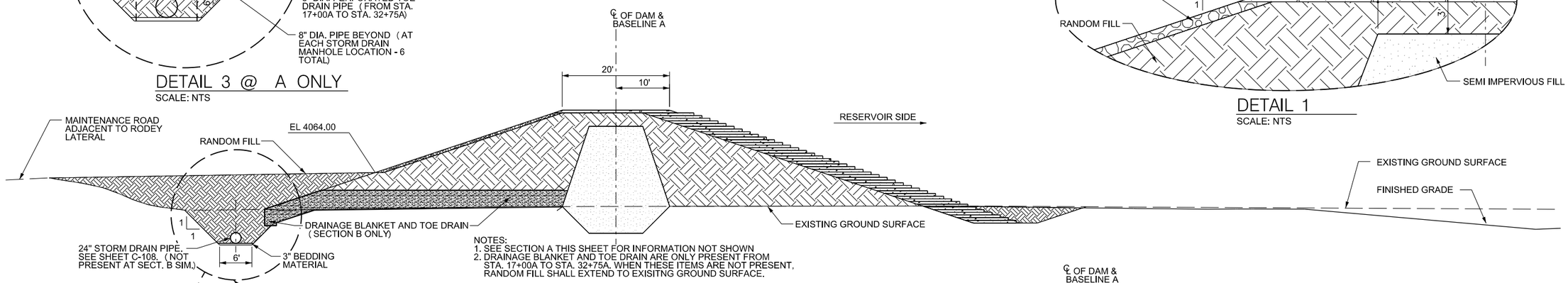

NOTES:
1. SEE SECTION A THIS SHEET FOR INFORMATION NOT SHOWN
2. DRAINAGE BLANKET AND TOE DRAIN ARE ONLY PRESENT FROM STA. 17+00A TO STA. 32+75A. WHEN THESE ITEMS ARE NOT PRESENT, RANDOM FILL SHALL EXTEND TO EXISITNG GROUND SURFACE.

B C-103 / B1 C-103 SECTION
SCALE: 1"=10'-0"

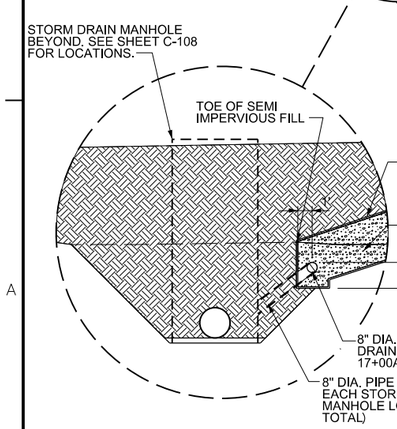

DETAIL 4 @ B ONLY
SCALE: NTS

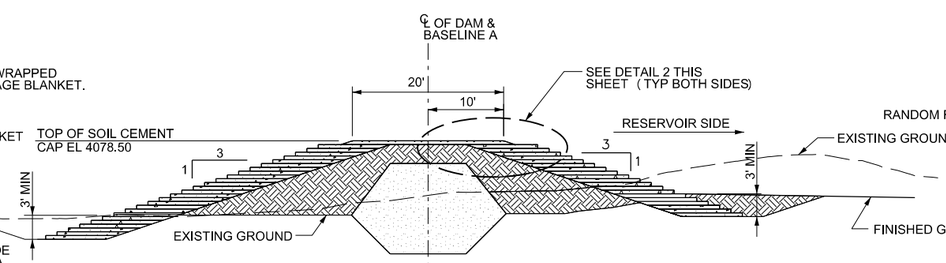

NOTE: SEE SECTION A THIS SHEET FOR INFORMATION NOT SHOWN

C C-103 SECTION
SCALE: 1"=10'-0"

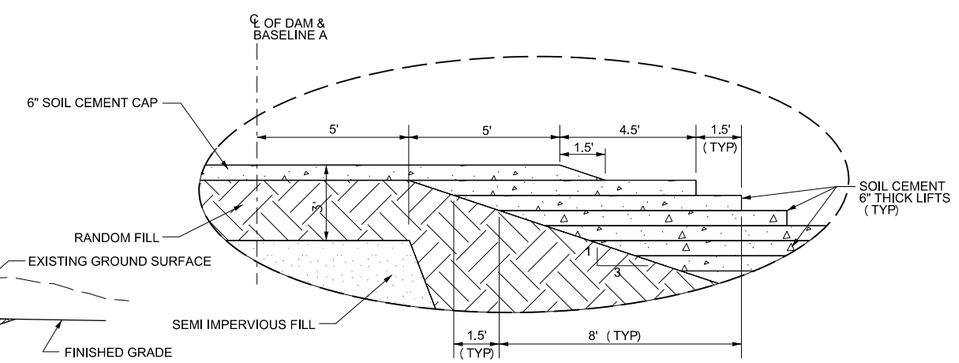

DETAIL 2
SCALE: NTS

1" = 5' 0' 2.5' 5' 10' 15'
1" = 10' 0' 5' 10' 20' 30'

US Army Corps of Engineers
Albuquerque District

Mark	Description	Date	Appr.

File Name: HTGS05C0-10LDGN
Plot Date: OCTOBER 2015
Plot Scale: 1to1
SOL/CONTRACT NO.
PROJECT NO.
Zero Accidents
Zero Tolerance

DESIGN BY: SEE COVER
DRAWN BY: SEE COVER
REVIEWED BY: SEE COVER

U.S. ARMY ENGINEER DISTRICT
CORPS OF ENGINEERS
ALBUQUERQUE, NEW MEXICO
CHIEF, GENERAL ENGINEERING SECTION

VILLAGE OF HATCH
SECTION 205 - HATCH, NEW MEXICO
DONA ANA COUNTY
DAM C

TYPICAL DAM SECTIONS

SHEET NO.
C-103
3 OF 10

SEQUENCE NO.
6

ATR BACKCHECK SET

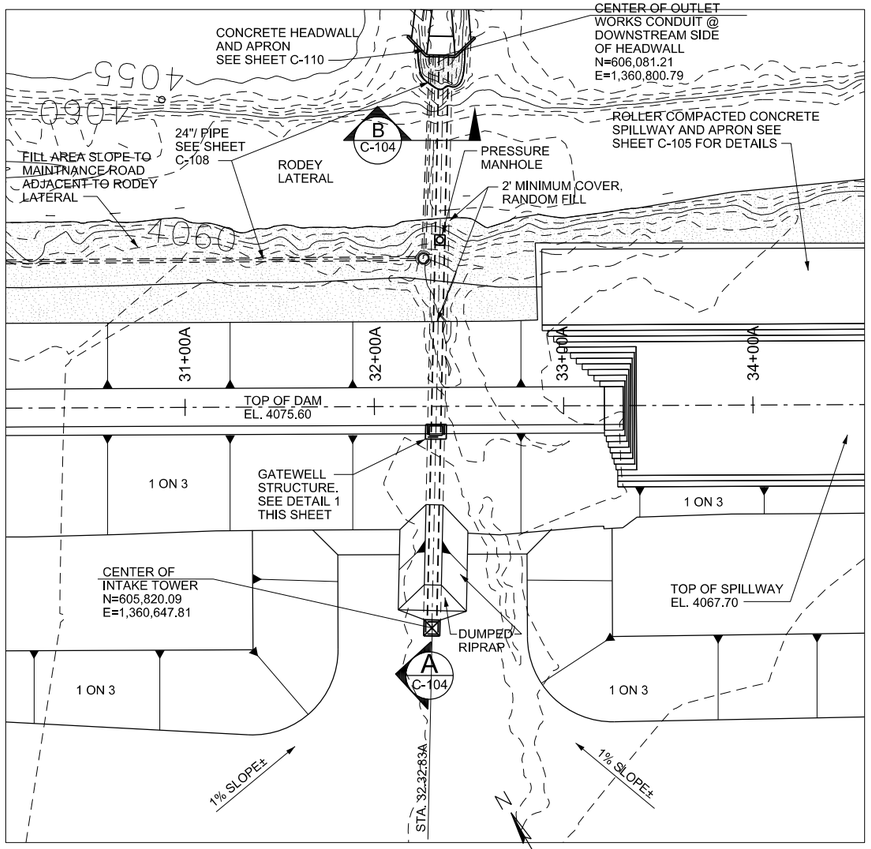

PLAN
SCALE: 1" = 40'

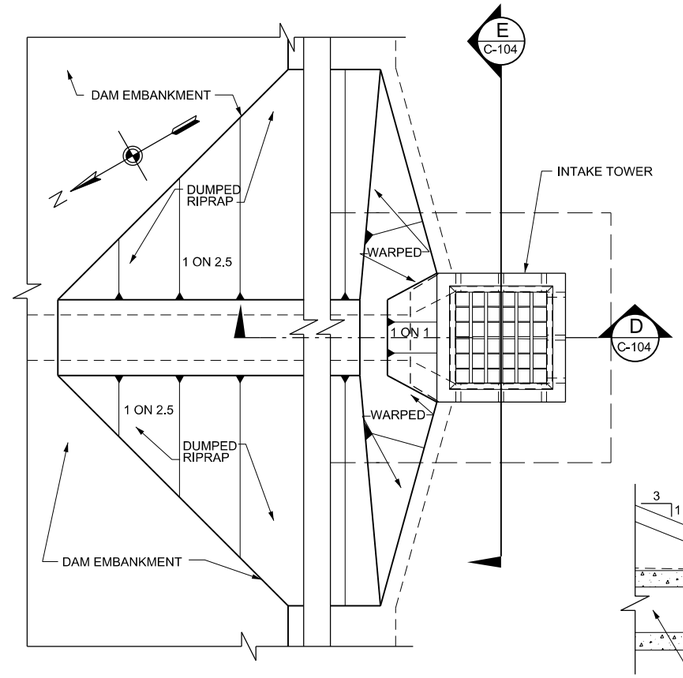

PLAN- INTAKE TOWER
SCALE: 1" = 4'

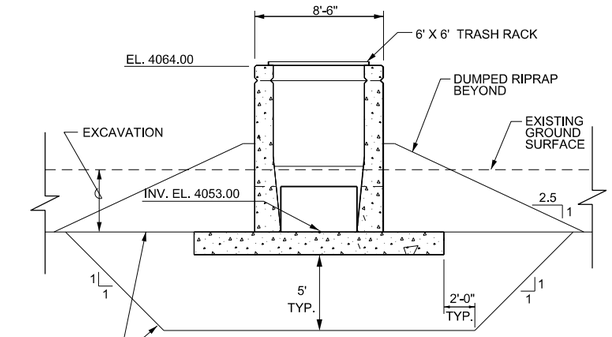

E C-104 SECTION
SCALE: 1" = 4'

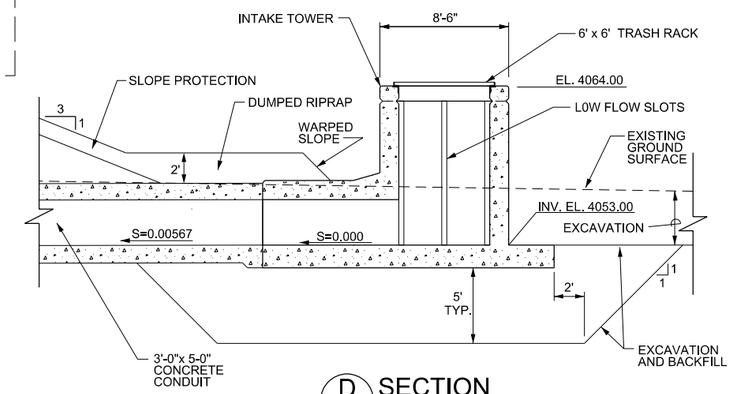

D C-104 SECTION
SCALE: 1" = 4'

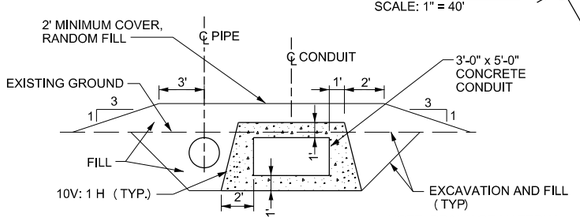

NOTE: DRAINAGE MATERIAL NOT SHOWN FOR CLARITY

B C-104 SECTION
SCALE: 1" = 5'

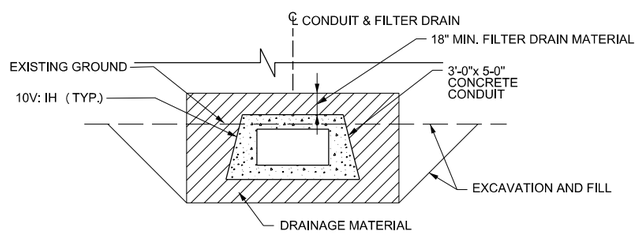

C C-104 SECTION
SCALE: 1" = 5'

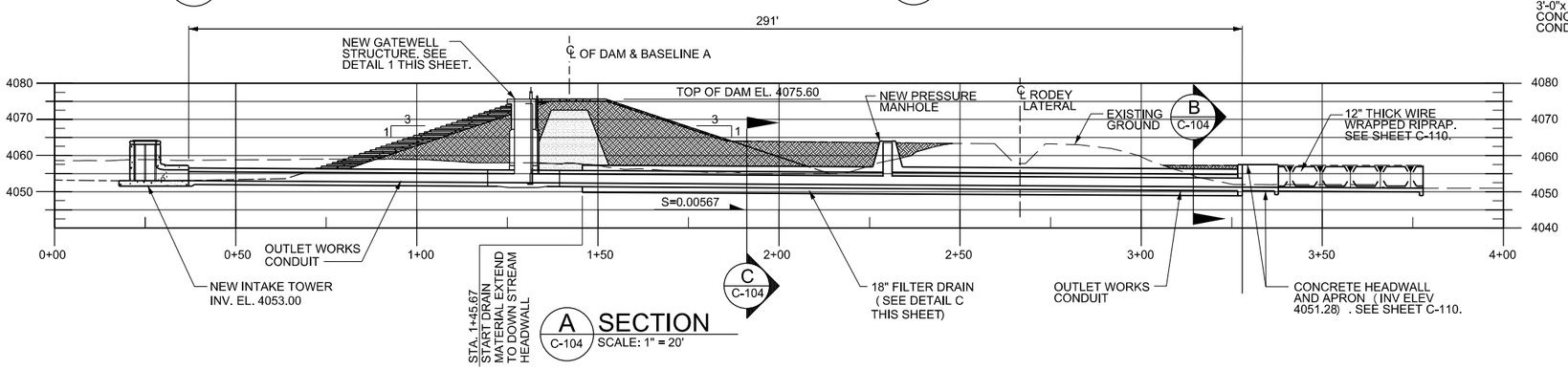

A C-104 SECTION
SCALE: 1" = 20'

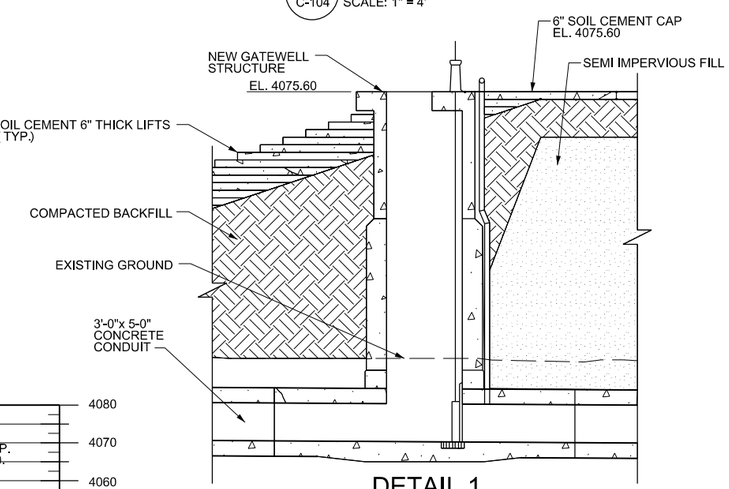

DETAIL 1
SCALE: 1" = 5'

1" = 4'	0'	2'	4'	8'	12'
1" = 5'	0'	2.5'	5'	10'	15'
1" = 20'	0'	10'	20'	40'	60'
1" = 40'	0'	20'	40'	80'	120'

ATR BACKCHECK SET

US Army Corps of Engineers
Albuquerque District

Mark	Description	Date	Appr.

File Name: HT05300C-104.DGN
Plot Scale: 40:1
Plot Date: OCTOBER 2015
SOL/CONTRACT NO.
PROJECT NO.
Zero Accidents
Zero Tolerance

DESIGN BY: SEE COVER
DRAWN BY: SEE COVER
REVIEWED BY: SEE COVER

U.S. ARMY ENGINEER DISTRICT
CORPS OF ENGINEERS
ALBUQUERQUE, NEW MEXICO
CHIEF, GENERAL ENGINEERING SECTION

VILLAGE OF HATCH
SECTION 205 - HATCH, NEW MEXICO
DAM C
DONA ANA COUNTY

OUTLET WORKS PLAN AND SECTIONS

SHEET NO.
C-104
4 OF 10

SEQUENCE NO.
7

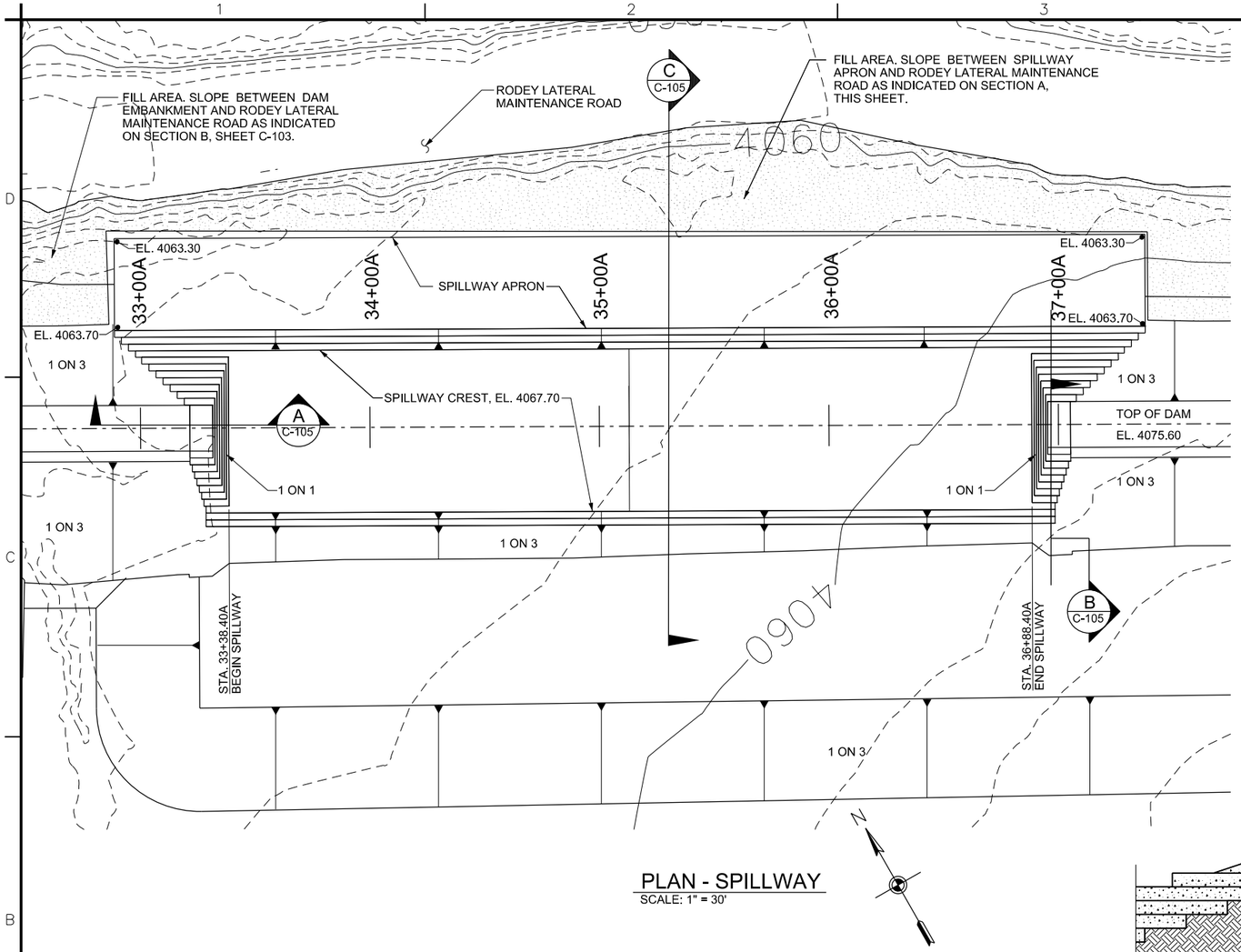

PLAN - SPILLWAY

SCALE: 1" = 30'

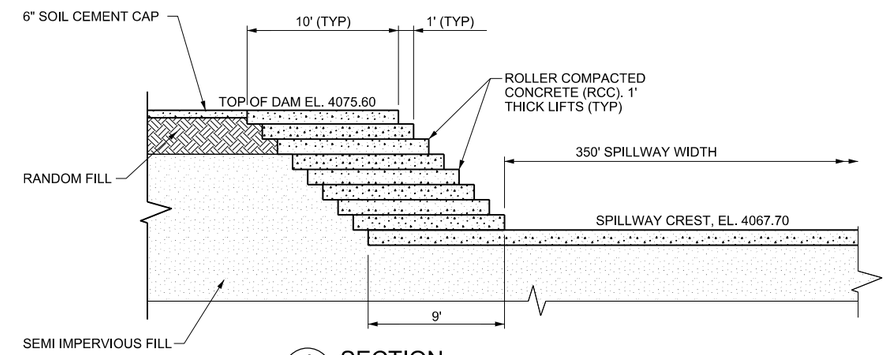

A C-105 SECTION

SCALE: 1" = 5'

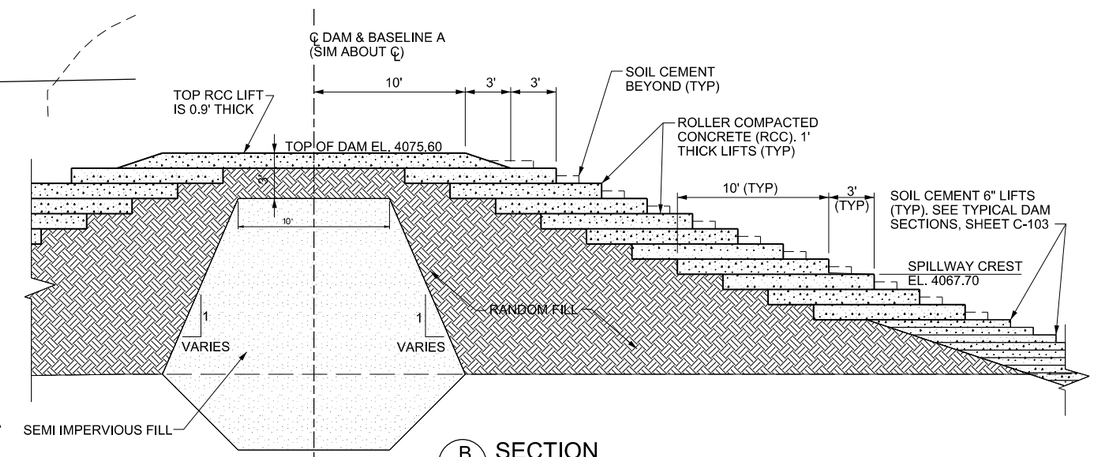

B C-105 SECTION

SCALE: 1" = 5'

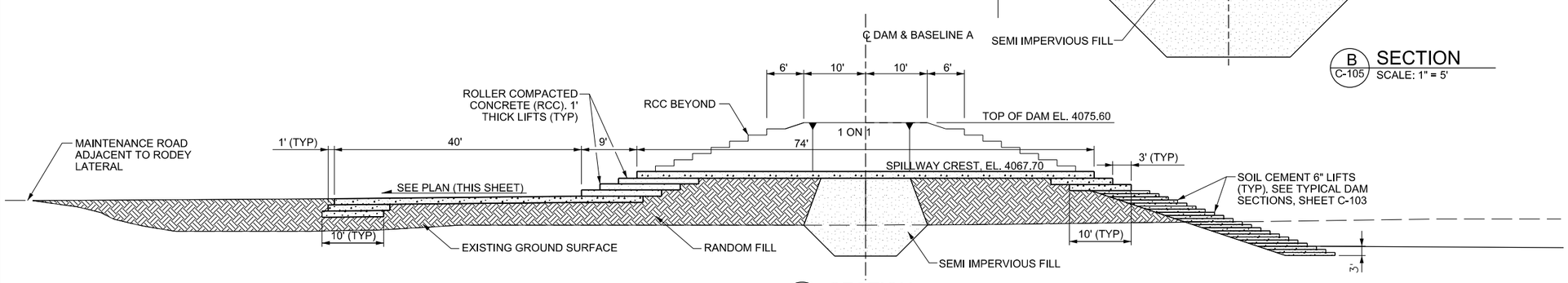

C C-105 SECTION

SCALE: 1" = 10'

1" = 5' 0' 2.5' 5' 10' 15'

1" = 10' 0' 5' 10' 20' 30'

1" = 30' 0' 15' 30' 60' 90'

ATR BACKCHECK SET

US Army Corps of Engineers
Albuquerque District

Mark	Description	Date	Appr.

File Name: HT05500C-105.DGN
Plot Scale: 2&1
Plot Date: OCTOBER 2015
SOL/CONTRACT NO.
PROJECT NO.
Zero Accidents Zero Tolerance

DESIGN BY: SEE COVER
DRAWN BY: SEE COVER
REVIEWED BY: SEE COVER

U.S. ARMY ENGINEER DISTRICT
CORPS OF ENGINEERS
ALBUQUERQUE, NEW MEXICO

CHIEF, GENERAL ENGINEERING SECTION

VILLAGE OF HATCH
SECTION 205 - HATCH, NEW MEXICO
DAM C
DONA ANA COUNTY

SPILLWAY PLAN AND SECTIONS

SHEET NO.
C-105
5 OF 10

SEQUENCE NO.
8

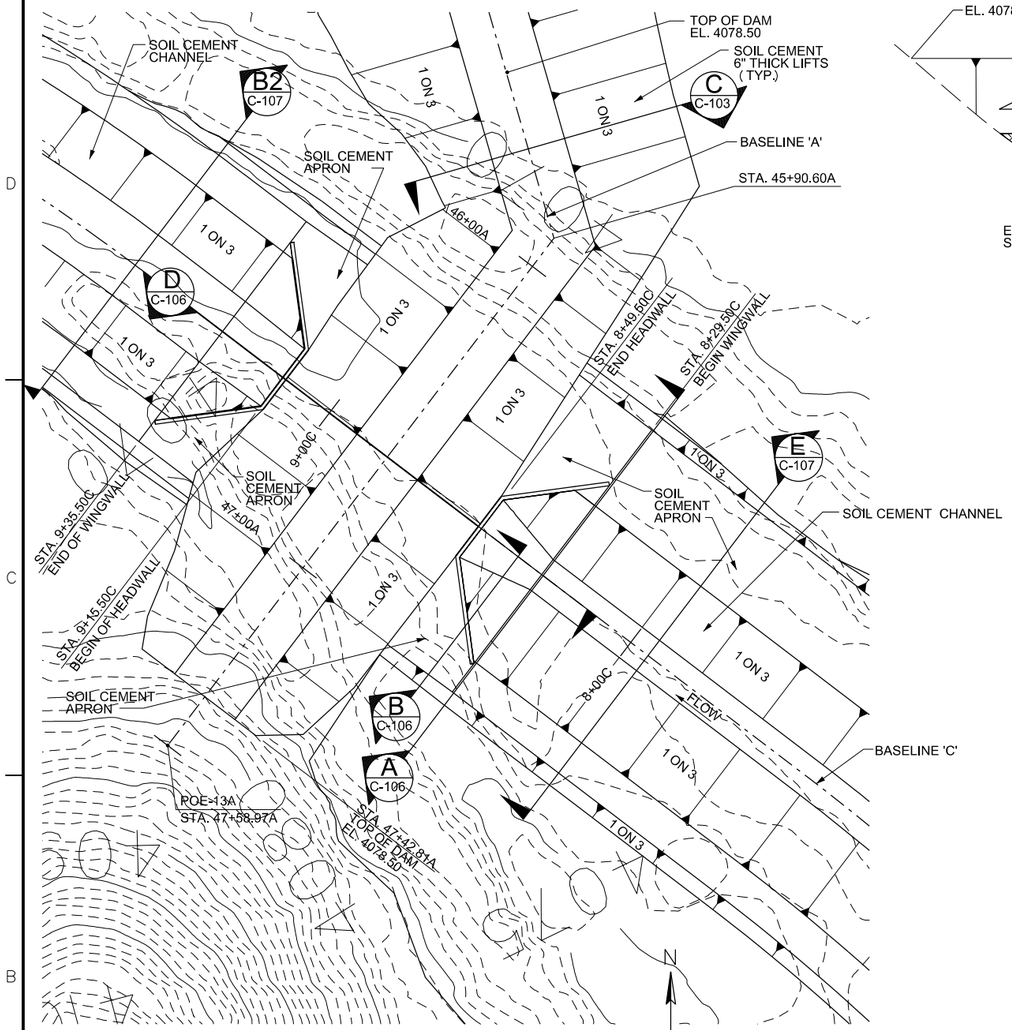

PLAN
SCALE: 1" = 20'

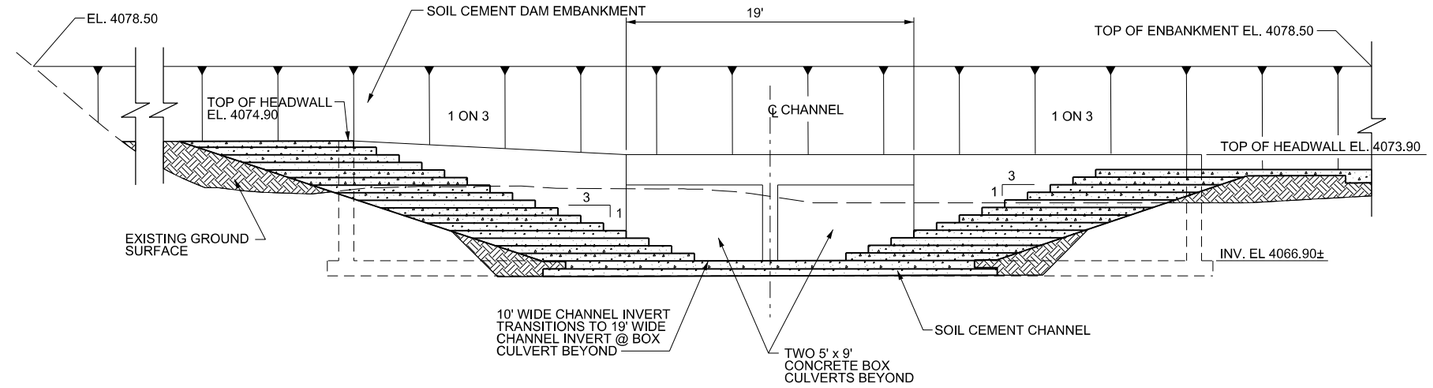

A C-106 SECTION
SCALE: 1" = 5'

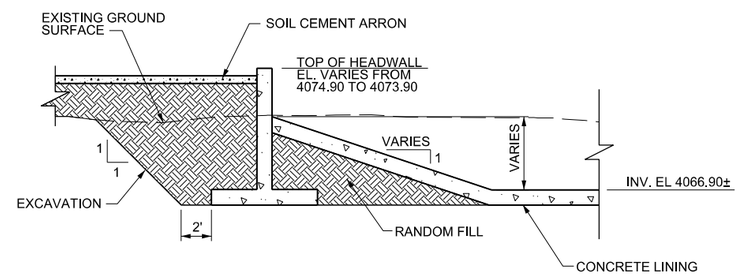

B C-106 SECTION
SCALE: 1" = 5'

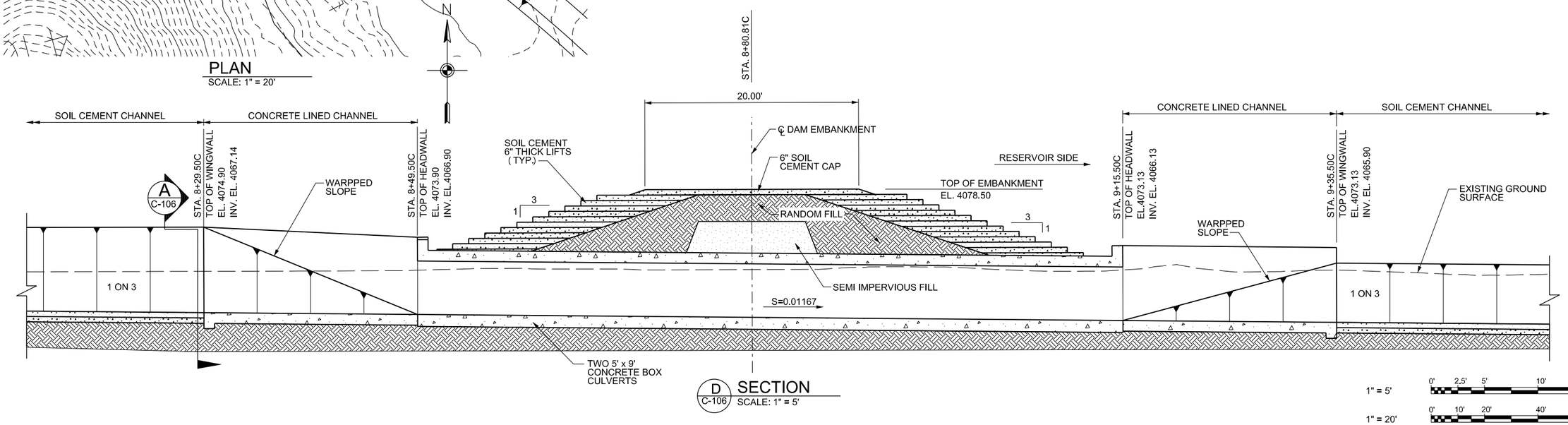

D C-106 SECTION
SCALE: 1" = 5'

1" = 5' 0' 2.5' 5' 10' 15'

1" = 20' 0' 10' 20' 40' 60'

ATR BACKCHECK SET

US Army Corps of Engineers
Albuquerque District

Mark	Description	Date	Appr.

File Name: HT05SOC-106.DGN
Plot Scale: 2to1
Plot Date: OCTOBER 2015
SOL/CONTRACT NO.
PROJECT NO.
Zero Accidents
Zero Tolerance

DESIGN BY: SEE COVER
DRAWN BY: SEE COVER
REVIEWED BY: SEE COVER

U.S. ARMY ENGINEER DISTRICT
CORPS OF ENGINEERS
ALBUQUERQUE, NEW MEXICO

CHIEF, GENERAL ENGINEERING SECTION

VILLAGE OF HATCH
SECTION 205 - HATCH, NEW MEXICO
DONA ANA COUNTY
DAM C

BOX CULVERT INLET PLAN AND SECTIONS

SHEET NO.
C-106
6 OF 10

SEQUENCE NO.
9

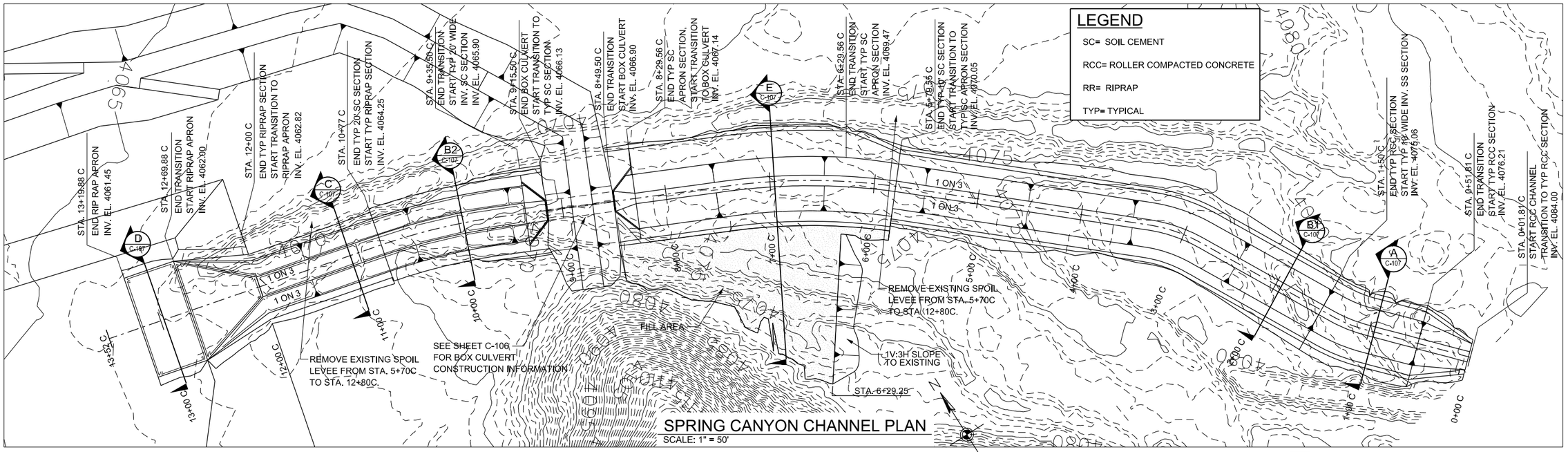

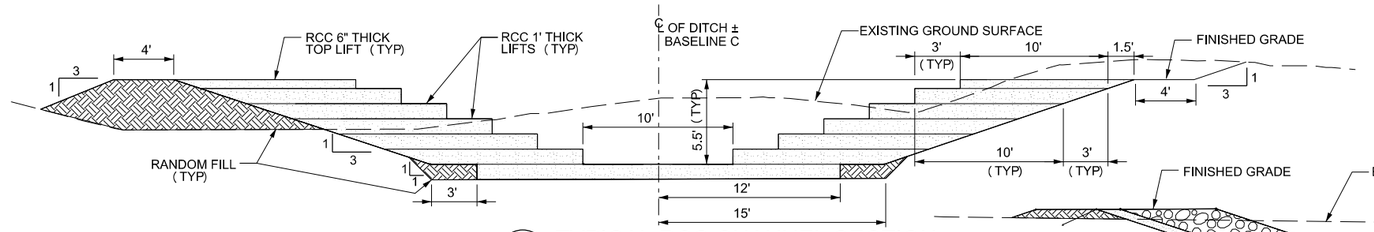

A C-107 TYPICAL RCC CHANNEL SECTION
SCALE: 1" = 5'

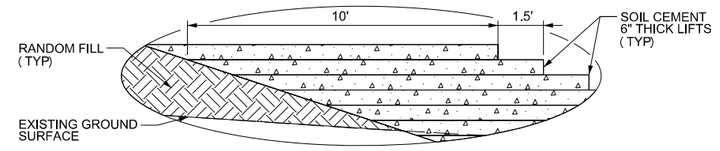

DETAIL 1
SCALE: NTS

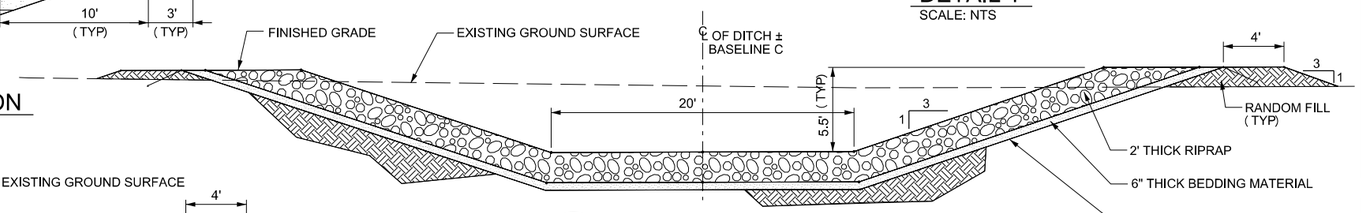

C C-107 TYPICAL RR CHANNEL SECTION
SCALE: 1" = 5'

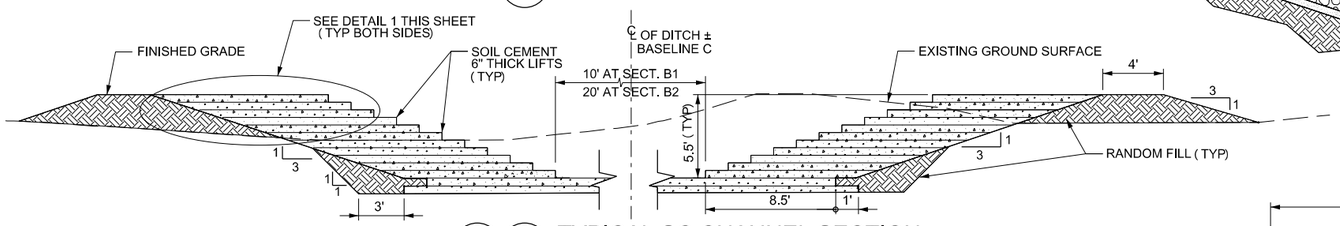

B1 C-107 B2 C-107 TYPICAL SC CHANNEL SECTION
SCALE: 1" = 5'

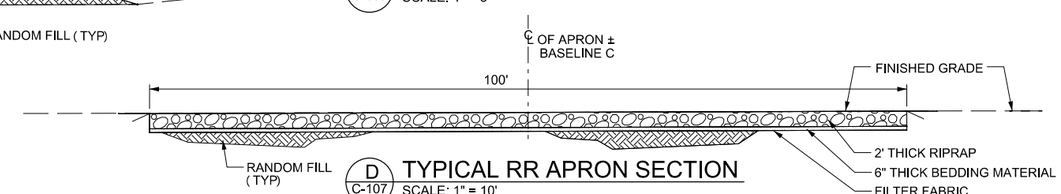

D C-107 TYPICAL RR APRON SECTION
SCALE: 1" = 10'

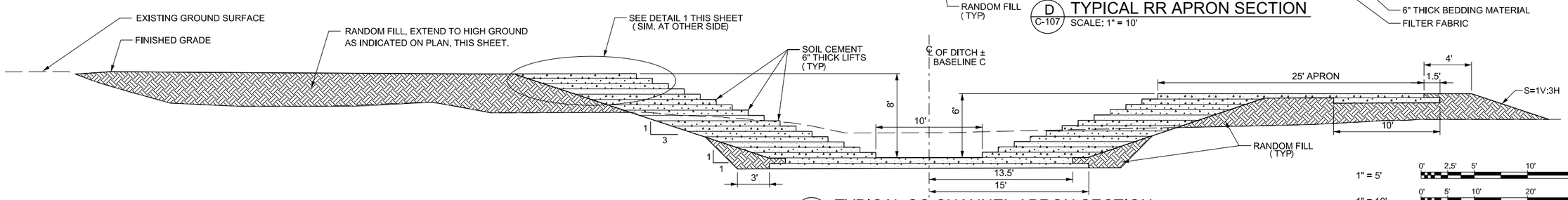

E C-107 TYPICAL SC CHANNEL APRON SECTION
SCALE: 1" = 5'

1" = 5' 0' 2.5' 5' 10' 15'
1" = 10' 0' 5' 10' 20' 30'
1" = 50' 0' 25' 50' 100' 150'

ATR BACKCHECK SET

US Army Corps of Engineers
Albuquerque District

Mark	Description	Date	Appr.

File Name: HT05SSOC-107.DGN
Plot Scale: 1:1
Plot Date: OCTOBER 2015
SOL/CONTRACT NO.
PROJECT NO.
Zero Accidents
Zero Tolerance

DESIGN BY: SEE COVER
DRAWN BY: SEE COVER
REVIEWED BY: SEE COVER

U.S. ARMY ENGINEER DISTRICT
CORPS OF ENGINEERS
ALBUQUERQUE, NEW MEXICO
CHIEF, GENERAL ENGINEERING SECTION

VILLAGE OF HATCH
SECTION 205 - HATCH, NEW MEXICO
DAM C
DONA ANA COUNTY

SPRING CANYON CHANNEL
PLAN AND SECTIONS

SHEET NO.
C-107
7 OF 10

SEQUENCE NO.
10

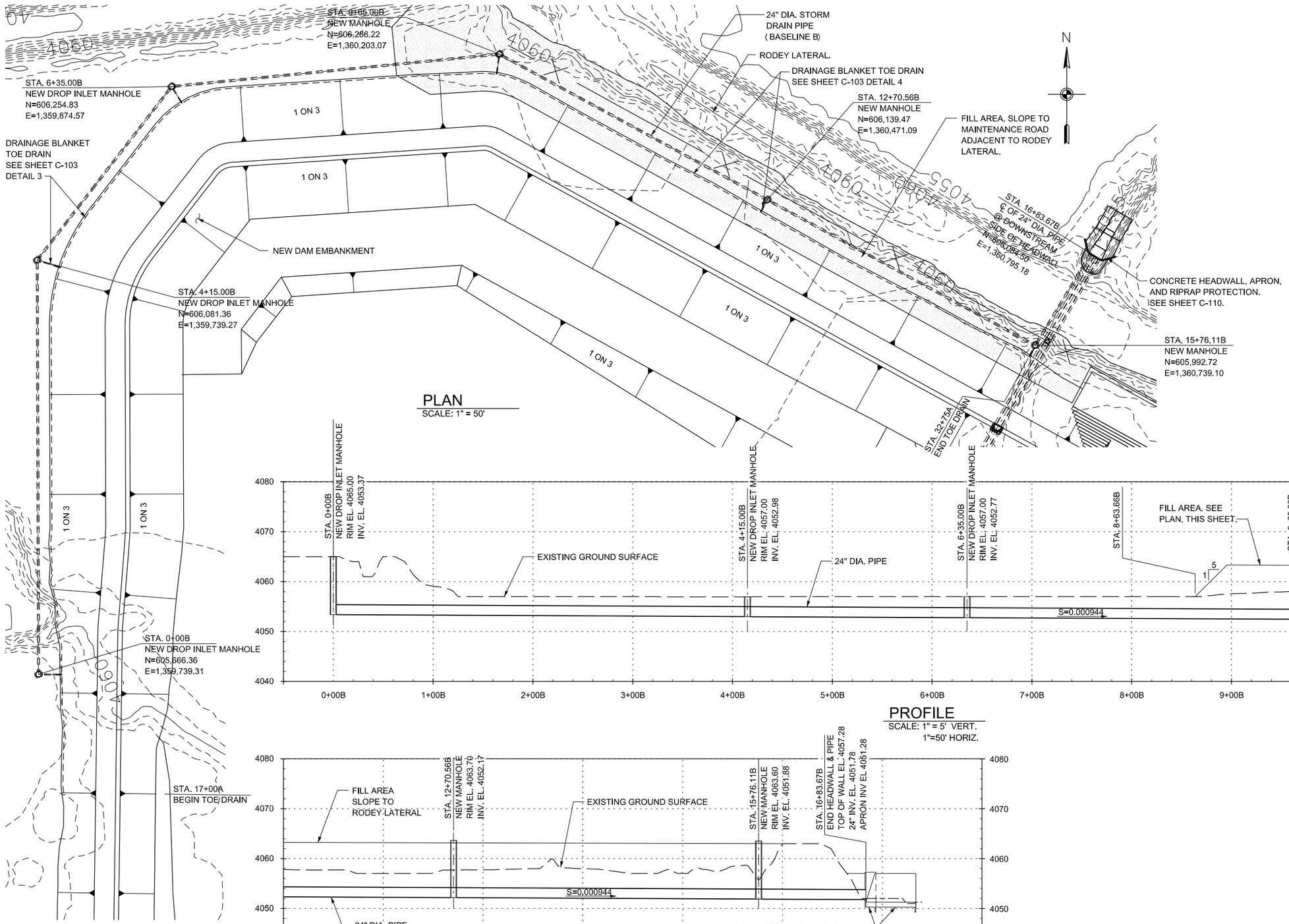

US Army Corps of Engineers
Albuquerque District

Mark	Description	Date	Appr.

File Name: HT03S02C-106.DGN
Plot Scale: 50:1
Plot Date: OCTOBER 2015
SOL/CONTRACT NO.
PROJECT NO.

Zero Accidents
Zero Tolerance

DESIGN BY: SEE COVER
DRAWN BY: SEE COVER
REVIEWED BY: SEE COVER

U.S. ARMY ENGINEER DISTRICT
CORPS OF ENGINEERS
ALBUQUERQUE, NEW MEXICO

CHIEF, GENERAL ENGINEERING SECTION

VILLAGE OF HATCH DONA ANA COUNTY
SECTION 205 - HATCH, NEW MEXICO
DAM C

STORM DRAIN LINE
PLAN AND PROFILE

SHEET NO.
C-108
8 OF 10

SEQUENCE NO.
11

1" = 5' 0' 2.5' 5' 10' 15'
1" = 50' 0' 25' 50' 100' 150'

ATR BACKCHECK SET

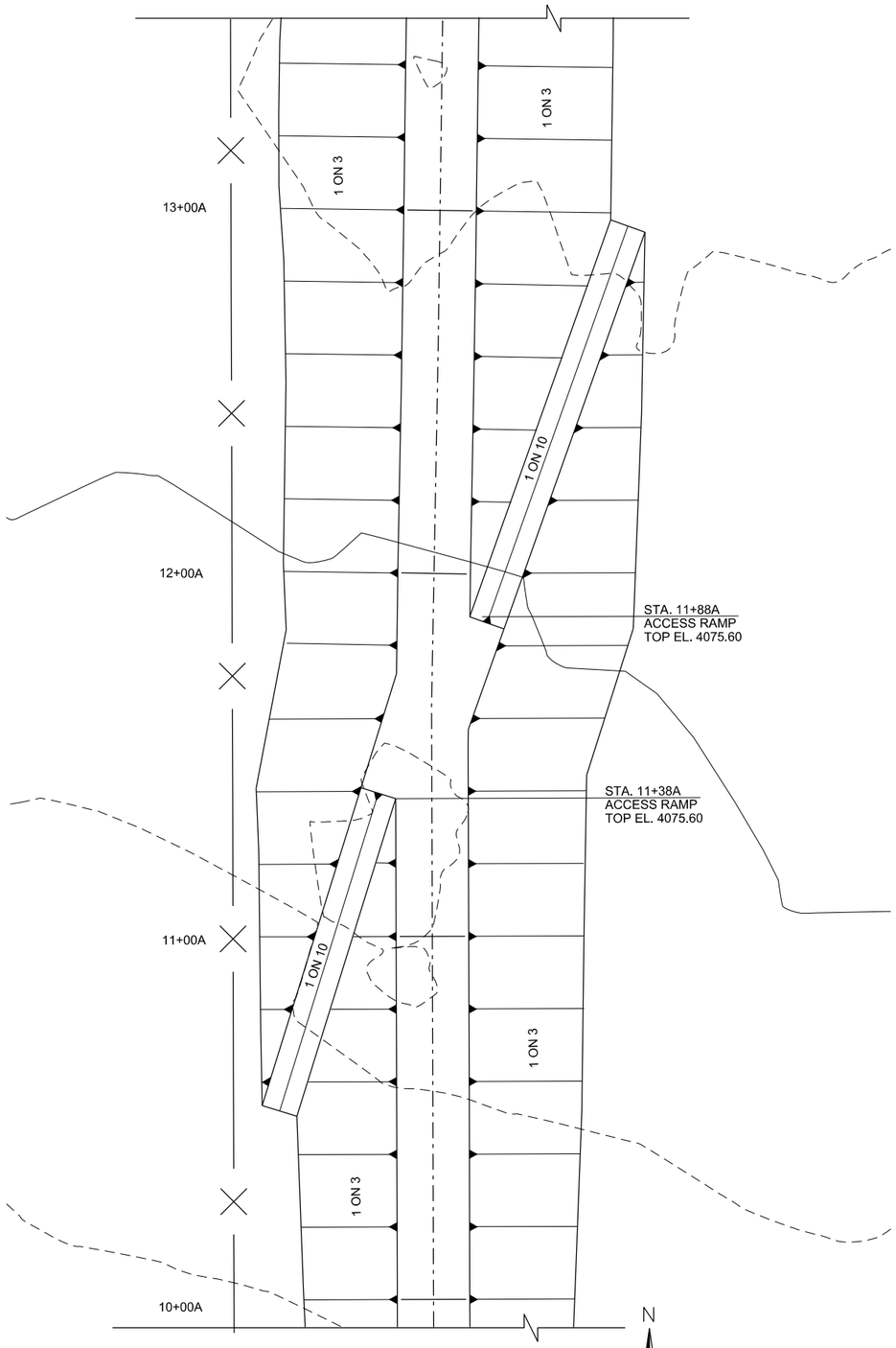

RAMP PLAN @ STA. 11+50A

SCALE: 1" = 20'

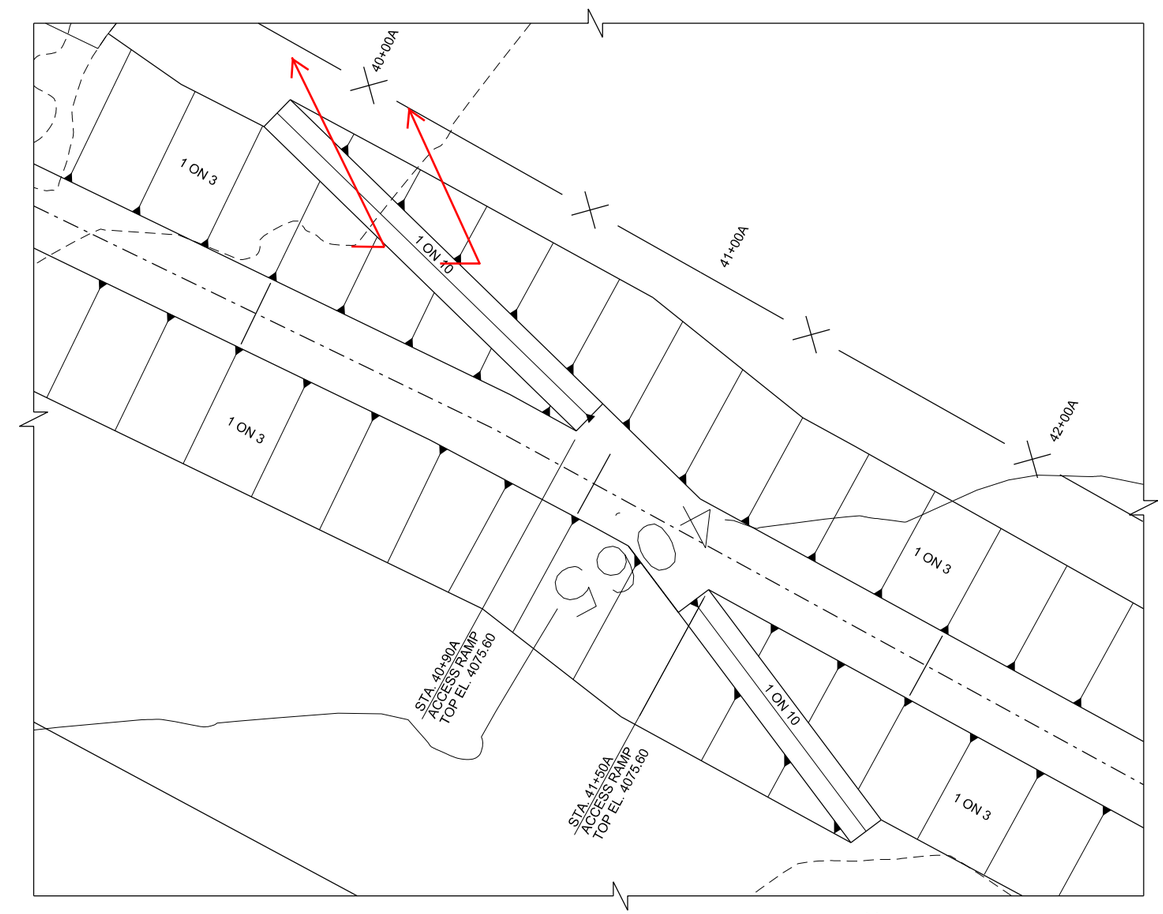

RAMP PLAN @ STA. 41+00A

SCALE: 1" = 20'

1" = 20'

0' 10' 20' 40' 60'

US Army Corps of Engineers
Albuquerque District

Mark	Description	Date	Appr.

File Name: h103ss2c-109.dgn
Plot Scale: 1:20
Plot Date: OCTOBER 2015
SOL/CONTRACT NO.
PROJECT NO.

Zero Accidents
Zero Tolerance

DESIGN BY: SEE COVER
DRAWN BY: SEE COVER
REVIEWED BY: SEE COVER

U.S. ARMY ENGINEER DISTRICT
CORPS OF ENGINEERS
ALBUQUERQUE, NEW MEXICO

CHIEF, GENERAL ENGINEERING SECTION

VILLAGE OF HATCH
SECTION 205 - HATCH, NEW MEXICO
DAM C
DONA ANA COUNTY

ACCESS RAMPS PLAN

SHEET NO.
C-109
9 OF 10

SEQUENCE NO.
12

ATR BACKCHECK SET

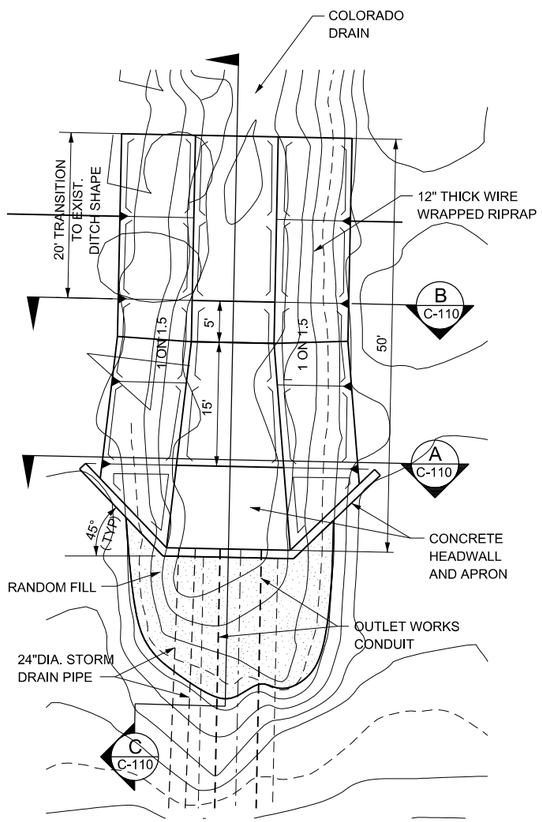

N

PLAN
SCALE: 1" = 10'

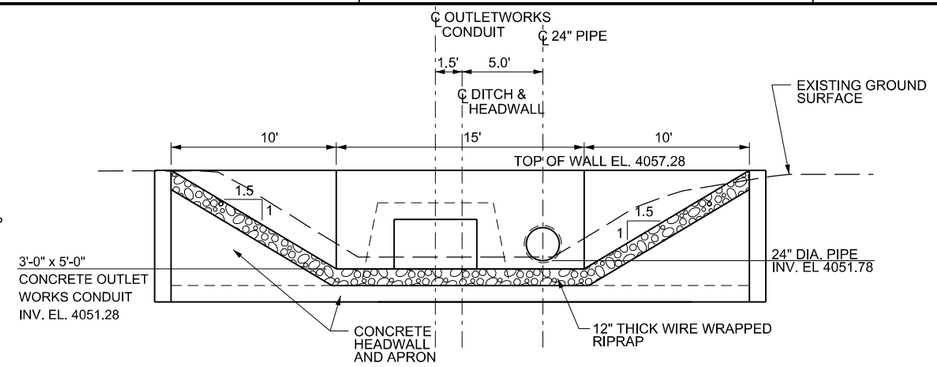

A C-110 SECTION
SCALE: 1" = 5'

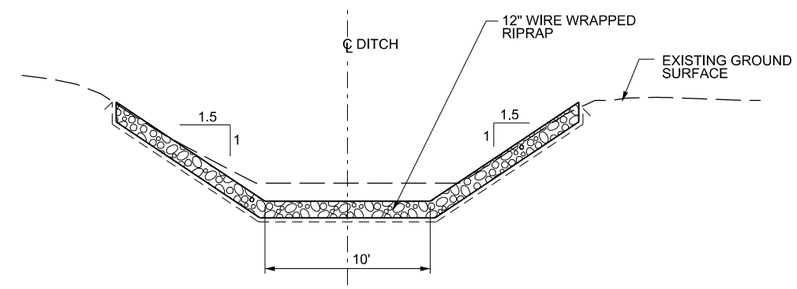

B C-110 SECTION
SCALE: 1" = 5'

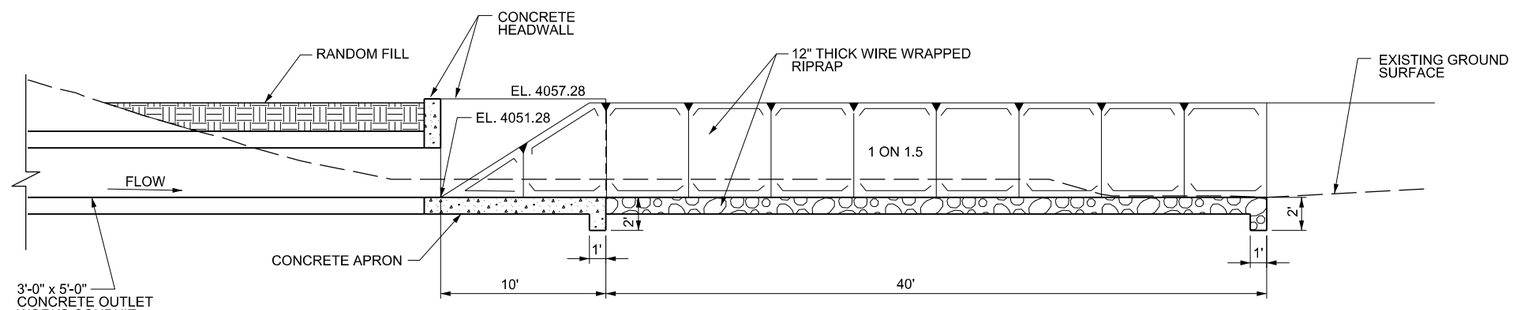

C C-110 SECTION
SCALE: 1" = 5'

DROP INLET AND MANHOLE NOTES:

1. CONCRETE MANHOLE SECTIONS SHALL MEET ASTM SPEC C 478-87 AND SHALL HAVE MANHOLE STEPS INSTALLED ON MAX. 16" VERTICAL SPACING.
2. HORIZONTAL JOINTS IN MANHOLE SECTIONS SHALL BE SEALED WITH A FLEXIBLE BUTYL RESIN SEALANT. 1" DIA. BEAD SEALANT SHALL BE CONSEAL CS-102, OR APPROVED EQUAL. A CEMENT MORTAR GROUT WILL BE APPLIED TO THE INSIDE AND OUTSIDE OF EVERY HORIZONTAL MANHOLE JOINT.
3. 2 1/2"x3/16" RECTANGULAR BAR ALUMINUM GRATE SEIDELHUBER 19S4 OR APPROVED EQUAL. CUT TO FIT INSIDE MANHOLE SPIGOT END.
4. SEE SHEET C-108 FOR MANHOLE RIM AND INVERT ELEVATION DATA; AND FOR PIPE INVERT ELEVATION DATA.

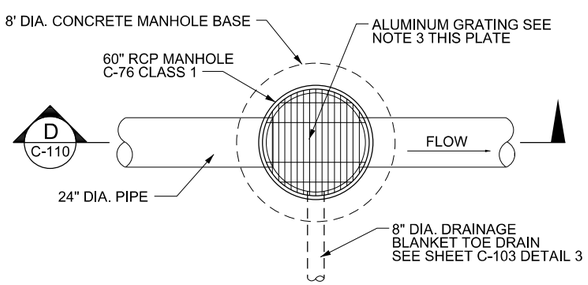

PLAN - DROP INLET MANHOLE
NOT TO SCALE

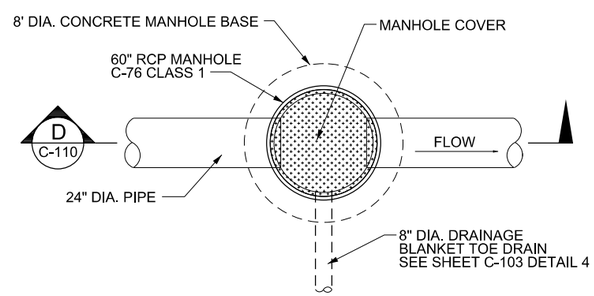

PLAN - MANHOLE
NOT TO SCALE

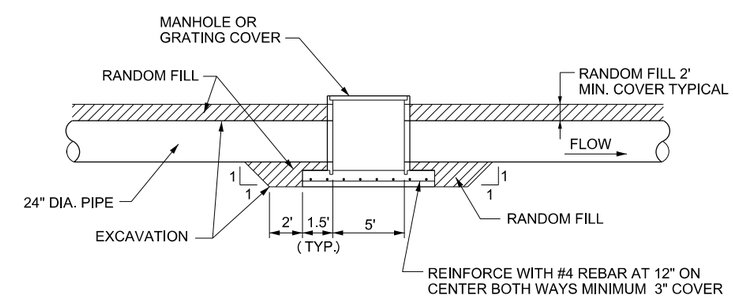

D C-110 SECTION
NOT TO SCALE

1" = 5' 0' 2.5' 5' 10' 15'

1" = 10' 0' 5' 10' 20' 30'

US Army Corps of Engineers
Albuquerque District

Mark	Description	Date	Appr.

File Name: HT03500C0-110.DGN
Plot Scale: 1to1
Plot Date: OCTOBER 2015
SOL/CONTRACT NO.
PROJECT NO.
Zero Accidents
Zero Tolerance

DESIGN BY: SEE COVER
DRAWN BY: SEE COVER
REVIEWED BY: SEE COVER

U.S. ARMY ENGINEER DISTRICT
CORPS OF ENGINEERS
ALBUQUERQUE, NEW MEXICO
CHIEF, GENERAL ENGINEERING SECTION

VILLAGE OF HATCH
SECTION 205 - HATCH, NEW MEXICO
DAM C
DONA ANA COUNTY

MANHOLE AND HEADWALL DETAILS

SHEET NO.
C-110
10 OF 10

SEQUENCE NO.
13

ATR BACKCHECK SET

Small Flood Risk Management Project Hatch, NM

EXHIBIT B – QUANTITY CALCULATIONS FOR DAMS A, B AND C

December 2016

US Army Corps of Engineers ®
Albuquerque District

HATCH QUANTITIES SUMMARY (2014)

Item	Dam A	Dam B	Dam C	Spring Canyon Channel
DAM				
Random Fill (General)	65,919.8	71,699.4	99,435.1	2,468.6
Random Fill (Key Trench)	11,122.5	11,275.3	11,816.7	
Random Fill (SC Key)	6,347.0	6,485.0	6,756.2	
Semi-Imp Fill	10,901.0	11,364.8	14,719.4	
Gravel Material (6" thick)	2,201.5	2,228.4	2,713.2	
Soil Cement (SC)	18,939.5	19,377.1	22,552.9	4,725.0
RCC	1,972.0	2,144.9	2,730.4	605.0
Rip Rap (2' thick)				1,302.4
Bedding Material (6" thick)				351.0
Concrete Box Culvert (CBC)				126.7
Filter Fabric (sq. yards)				2,355.9
Dam-Channel Exc (general)	10,578.3	10,808.4	11,260.3	11,460.2
Dam Excav. (Key Trench)	11,122.5	11,275.3	11,816.7	
Reservoir Exc. (RE) (Model)	158,422.4	156,178.1	149,407.7	
Reservoir Fill	524.4	490.6	1,698.0	
Clear & Grubb (part of RE)	9,000.0	9,000.0	9,000.0	
Extra Reservoir Storage Above Design Cap (acre-ft)	3.8	13.8	22.1	
Extra Reservoir Stor. Above Design Cap (cubic yards)	6,130.7	22,264.0	35,654.7	
Reservoir Exc. (Design Cap)	152,291.7	133,914.1	113,753.0	
Fill between Rodey Lateral and Dam	9,898.5	8,605.8	8,378.8	

OTHER	Fill	Excavation
OutletWorks	1,086.0	3,218.0
Storm Drain System	4,240.0	4,440.0

	Dam A	Dam B	Dam C	Dam C w extra Storage/Excvtn
Total Excv (less clr & grub)	190,241.4	188,380.0	182,602.9	182,602.9
Total Excavation (less extra res storage)	184,110.7	166,116.0	146,948.2	
Total Fill	136,172.3	141,817.6	177,876.7	177,876.7
Net Soil Waste	49,758.8	21,581.2		
Net Soil Import			45,389.4	3,316.9

Notes:

1. All quantities are neat line and units are cubic yards unless noted otherwise.
2. Dam excavation (general) is primarily excavation for the Soil Cement (SC) key. Random fill (backfill) for the SC key is assumed to be 60% of the Dam Excavation (general) value.
3. Total fill quantities also include semi-impervious fill and the soil cement quantity.
4. Clear and Grub excavation is considered unusable fill material (due to organics present).
5. Net soil waste and import assumes soil shrinkage of 1.23; and soil swell of 1.18.
6. Dam ramps (wider dam section) have not been accounted for at any of the Dams.
7. Quantities associated with the Spring Canyon Channel and Dam Intersection are included above (except for the CBC U/S & D/S headwalls to be done by Cost Engr).
8. The following Outletworks quantities were generated by Cost Engineering: Intake Tower; Gatewell Structure, Conduit Concrete; Pressure Manhole; Filter Drain Material; WWRR (@outfall); Excavation & Fill.

Small Flood Risk Management Project Hatch, NM

EXHIBIT C – QUANTITY ADJUSTMENTS FOR DAM C

December 2016

US Army Corps of Engineers
Albuquerque District

GENERAL. Due to ongoing design changes, the original 2014 dam section has been modified since the Agency Technical Review (ATR). Quantities have been adjusted For Dam C only (the recommended dam alternative). This write-up and the following tables and the sheets illustrate how the original 2014 quantities for Dam C are modified to account for the material changes associated with the current 2015 dam section. Refer to Exhibit B of this Appendix for Original 2014 Dam C quantities and associated calculations. The table titled "Hatch Modified Dam C Quantities" summarizes the quantities associated with the current/modified Dam C section (including Spring Canyon Channel, which has not changed since the ATR). 2014 Dam C materials affected by the 2015 Dam C section modifications include:

* Random Fill (General) – Quantity decreases due to addition of more semi-impervious material and the drainage blanket within the dam section.

*Random Fill (Key Trench) - This is now all Semi-Impervious Fill. Volume has not changed.

*Semi-Imp Fill (General) – Quantity increases due to addition of a semi-impervious core within the dam section. Associated volume is greater than the semi-impervious fill located within the 2014 Dam C non-reservoir side slope.

*Drain Blanket – This is a new material that was not in the 2014 dam section.

* Dam Excavation – This quantity increases slightly due to excavation associated with the portion of the drainage blanket and toe drain below existing grade.

The other material quantity volumes remain constant.

DAM SECTION COMPARISONS. The current 2015 dam section and the original 2014 dam section are illustrated in the following sheets, at several heights and locations. Only the internal portion of the dam (under the soil cement, roller compacted concrete, and gravel material) has changed. When comparing the 2015 dam section to the 2014 dam section, with a decrease in dam height: percentage of Random Fill decreases; percentage of Semi-Impervious Fill increases; and percentage of Drain Blanket material increases. The dam section material percentages associated with the 11.89 feet high dams section (Sta. 14+00A) were utilized to adjust the applicable 2014 material quantities, as this height is closest to the weighted/average Dam C height. The Sta. 14+00A dam height of 11.89 feet is slightly lower than the weighted/average Dam C height of 12.92 feet, which should be conservative. See the "Station 14+00A (Modified 2015 Dam C Section)" within the "Dam C Section Comparisons" portion of the calculations for associated 2015 dam section material adjustment percentages.

WEIGHTED/AVERAGE DAM C HEIGHT. The weighted/average height for Dam see was determined to be 12.92 feet. See associated profile and table calculations.

DAM C RANDOM FILL AND DRAINAGE BLANKET QUANTITY ADJUSTMENTS. The semi-impervious core within the dam section occurs within the entire dam. The drainage blanket and toe drain system are only present from Sta. 17+00A to Sta. 32+75A. The modified Random Fill (General) and Drainage Blanket (above existing grade) volumes assume the blanket occurs within the entire dam. Associated volumes are adjusted to be more realistic. These values are reflected in the table titled "Hatch Modified Dam C Quantities". See associated assumptions and calculations.

HATCH MODIFIED DAM C QUANTITIES (2015)

Item	Dam C	Spring Canyon Channel
DAM		
Random Fill (General)	69,303.2	2,468.6
Adjust Random Fill (General)	77,642.2	
Semi-Imp Fill (Key Trench)	11,816.7	
Random Fill (SC Key)	6,756.2	
Semi-Imp Fill (General)	28,173.3	
Drain. Blnkt (above exist grade)	16,678.0	
Drain. Blnkt (below exist grade)	991.7	
Adjust Drain. Blnkt (total)	9,330.7	
Gravel Material (6" thick)	2,713.2	
Soil Cement (SC)	22,552.9	4,725.0
RCC	2,730.4	605.0
Rip Rap (2' thick)		1,302.4
Bedding Material (6" thick)		351.0
Concrete Box Culvert (CBC)		126.7
Filter Fabric (sq. yards)		2,355.9
Dam-Channel Exc (general)	11,260.3	11,460.2
Dam Excav. (Key Trench)	11,816.7	
Dam Excv. (D Blnkt below grd)	991.7	
Reservoir Exc. (RE) (Model)	149,407.7	
Reservoir Fill	1,698.0	
Clear & Grubb (part of RE)	9,000.0	
Extra Reservoir Storage Above Design Cap (acre-ft)	22.1	
Extra Reservoir Stor. Above Design Cap (cubic yards)	35,654.7	
Reservoir Exc. (Design Cap)	113,753.0	
Fill between Rodey Lateral and Dam	8,378.8	

OTHER	Fill	Excavation
OutletWorks	1,086.0	3,218.0
Storm Drain System	4,240.0	4,440.0

	Dam C	Dam C w extra Storage/Excvtn
Total Excv (less clr & grub)	183,594.6	183,594.6
Total Excavation (less extra res storage)	147,939.9	
Total Fill	169,537.7	169,537.7
Net Soil Waste		8,110.3
Net Soil Import	33,962.2	

QUANTITY CHECK (See Note below)	
2014 Dam Sect	
Random Fill (G) =	99,435.10
Random Fill (KT) =	11,816.70
Semi-Imp Fill =	14,719.40
Total Volume =	125,971.20
2015 Dam Sect (See Note 2)	
Random Fill (G) =	69,303.2
Semi-Imp Fill (KT) =	11,816.7
Semi-Imp Fill (G) =	28,173.3
D Blanket (abv ex grd) =	16,678.0
Total Volume =	125,971.2

Note: Since only the internal portion of the dam section has changed, the sum of the volumes of the above dam section materials should be equal between the 2014 & 2015 dam sections.

ADJUSTMENT QUANTITY CHECK	
Random Fill (G) =	77,642.18
Semi-Imp Fill (KT) =	11,816.70
Semi-Imp Fill (G) =	28,173.33
D Blanket (abv ex grd) =	8,338.99
Total Volume =	125,971.20

Notes (See 2015 Dam C Calculations for associated assumption justifications):

1. See Notes 1 through 8 associated with Original (2014) Dam Section Quantities.
2. For 2015 Dam: Random Fill (General) = 60.71% of the above grade internal portion of dam (AGIPD) =114,154.5 yd3 (99,435.1+14,719.4); Semi-Imp Fill (G)=24.68% of AGIPD; and D Blanket=14.61% of AGIPD
3. The above Drainage Blanket volume (above exist grade) assume it is located below the entire dam. Since it is located between Sta 17+00 & 32+75 this value is reduced by 50%. Below grade value is correct.
4. Adjust Random Fill (General) = Random Fill (General) + 50% of D Blnkt (above exist grade).
5. Drain. Blnkt (below exist grade) = avg area x drain blanket length = (17.0 ft2 x 1575')/27 = 991.7 yd3
6. Cut and Fill can be balanced by excavating reservoir between Model value of149,407.4 yd3 and the Design Capacity value of 113,753 yd3 (i.e. over excavate reservoir area by 27,544.4 in lieu of 35,654.7 yd3).

Dam C Section Comparisons

Current/Modified 2015 Dam Section

vs.

Original 2014 Dam Section

Total Area below gravel and soil cement, but above exist. grade = 862.38 + 232.50 + 153.03 = 1,247.91 ft2
Percent Random Fill = 862.38/1,247.91 = 69.11
Percent Semi Impervious Fill = 232.50/1,247.91 = 18.63
Percent D.Blanket (above grade) = 153.03/1,247.91 = 12.26

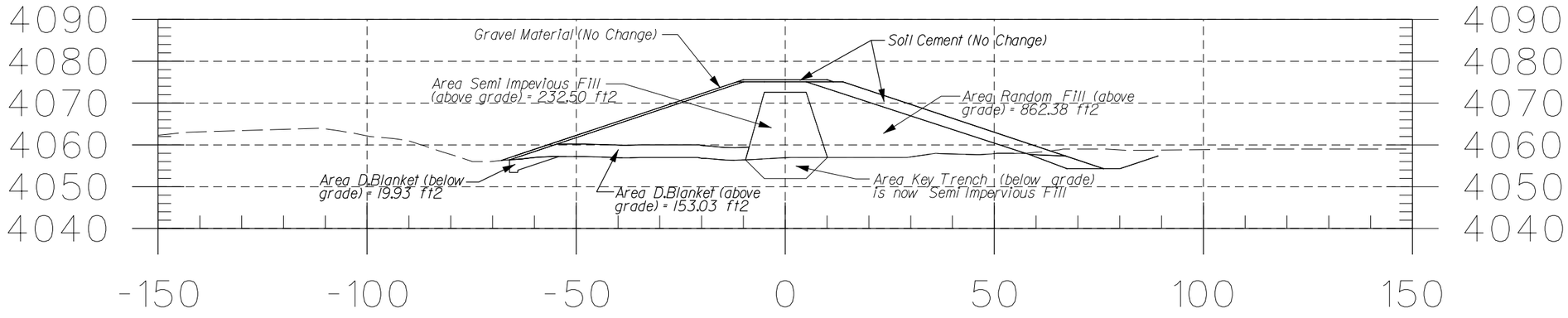

HEIGHT=18.67'

STA. 32+50A (Modified 2015 Dam C Section)

Total Area below gravel and soil cement, but above exist. grade = 1077.14 + 170.91 = 1,248.05 ft2
Percent Random Fill = 1077.14/1,248.05 = 86.31
Percent Semi Impervious Fill = 170.91/1,248.05 = 13.69

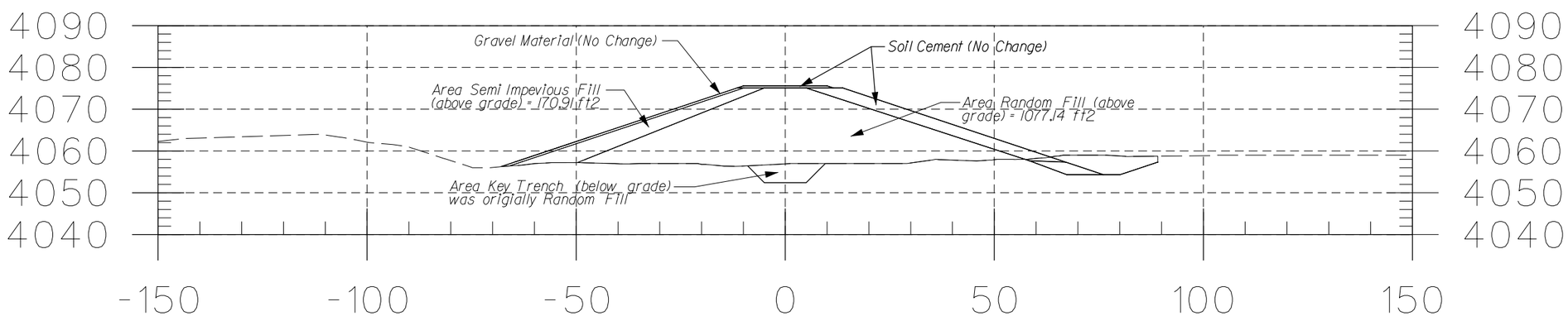

HEIGHT=18.67'

STA. 32+50A (Original 2014 Dam C Section)

Total Area below gravel and soil cement, but above exist. grade = 639.26 + 207.11 + 102.73 = 949.10 ft2
Percent Random Fill = 639.26/949.10 = 67.36
Percent Semi Impervious Fill = 207.11/949.10 = 21.82
Percent D.Blanket (above grade) = 102.73/949.10 = 10.82

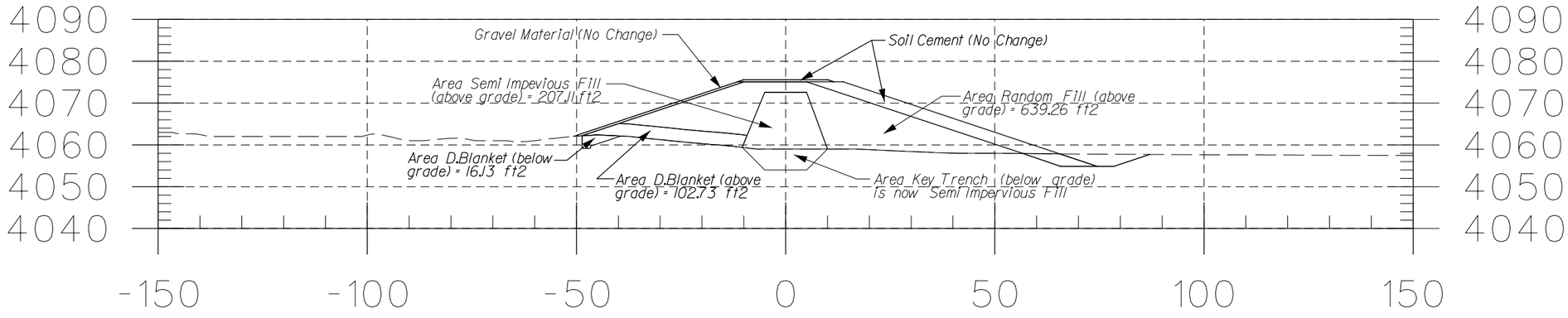

HEIGHT=16.60'

STA. 18+50A (Modified 2015 Dam C Section)

Total Area below gravel and soil cement, but above exist. grade = 844.35 + 104.73 = 949.08 ft2
Percent Random Fill = 844.35/949.08 = 88.97
Percent Semi Impervious Fill = 104.73/949.08 = 11.03

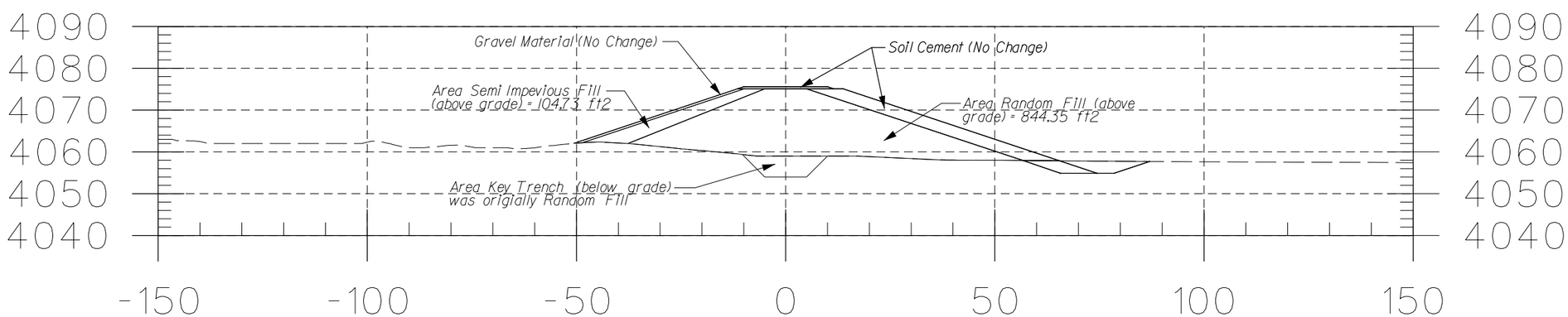

HEIGHT=16.60'

STA. 18+50A (Original 2014 Dam C Section)

Total Area below gravel and soil cement, but above exist. grade = 328.80 + 133.66 + 79.16 = 541.62 ft2
Percent Random Fill = 328.80/541.62 = 60.71
Percent Semi Impervious Fill = 133.66/541.62 = 24.68
Percent D.Blanket (above grade) = 79.16/541.62 = 14.61

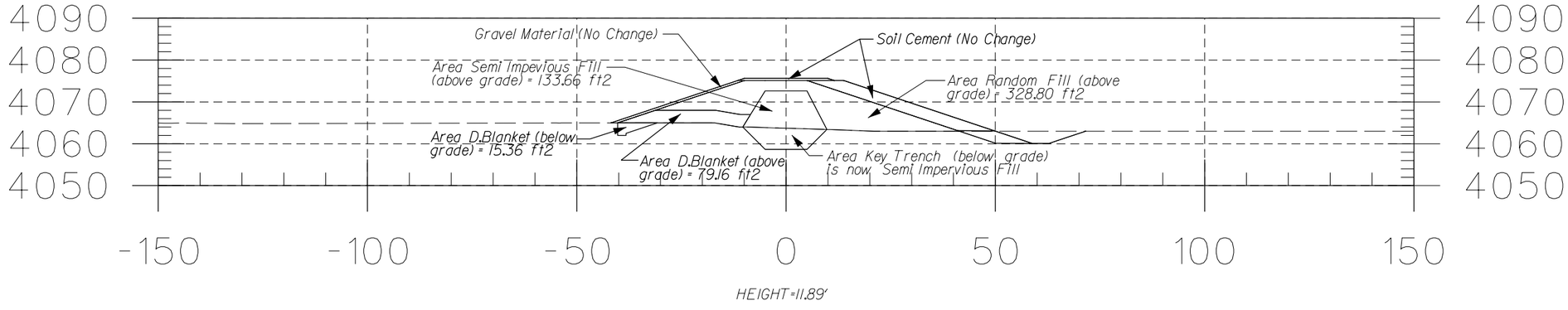

STA. 14+00A (Modified 2015 Dam C Section)

Total Area below gravel and soil cement, but above exist. grade = 466.47 + 75.20 = 541.67 ft2
Percent Random Fill = 466.47/541.67 = 86.12
Percent Semi Impervious Fill = 75.20/541.67 = 13.88

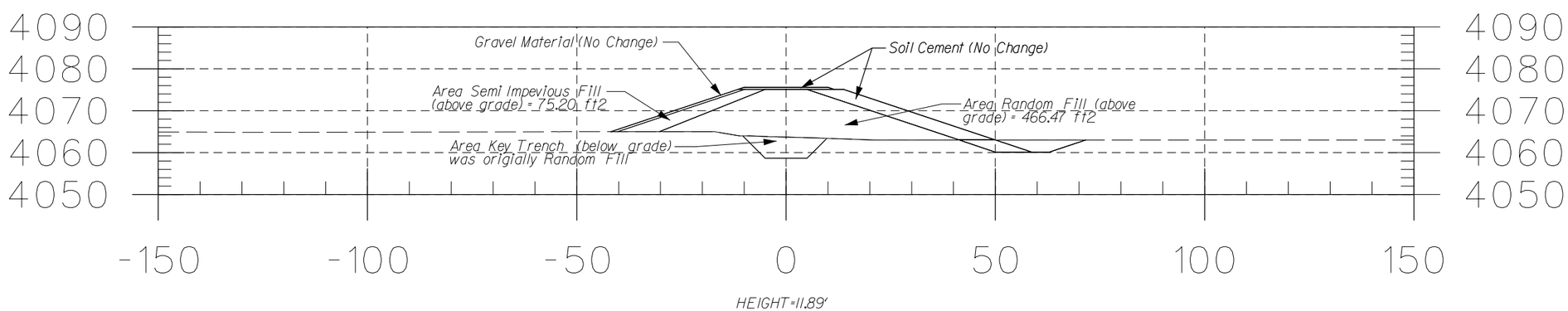

STA. 14+00A (Original 2014 Dam C Section)

Total Area below gravel and soil cement, but above exist. grade = 186.30 + 91.33 + 71.41 = 349.04 ft2
Percent Random Fill = 186.30/349.04 = 53.37
Percent Semi Impervious Fill = 91.33/349.04 = 26.17
Percent D.Blanket (above grade) = 71.41/349.04 = 20.46

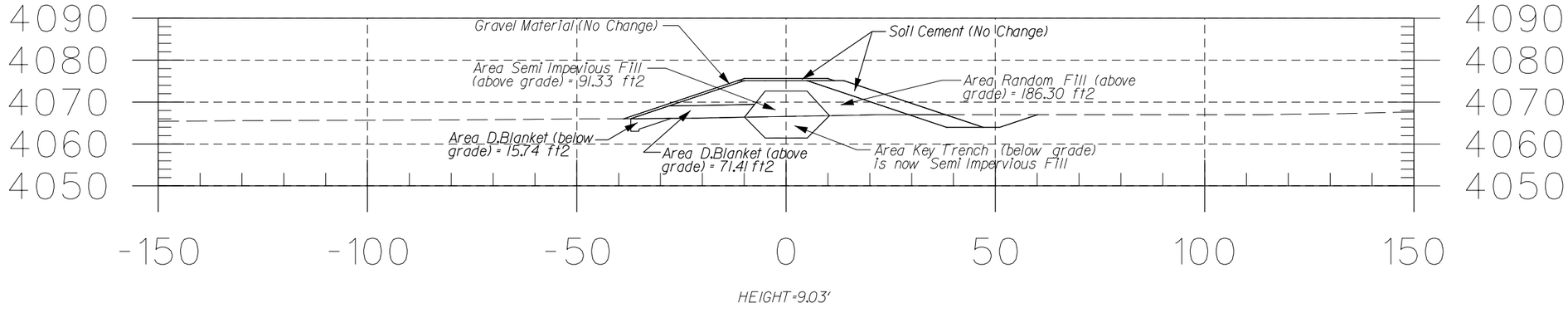

STA. 43+50A (Modified 2015 Dam C Section)

Total Area below gravel and soil cement, but above exist. grade = 284.24 + 64.82 = 349.06 ft2
Percent Random Fill = 284.24/349.06 = 81.43
Percent Semi Impervious Fill = 64.82/349.06 = 18.57

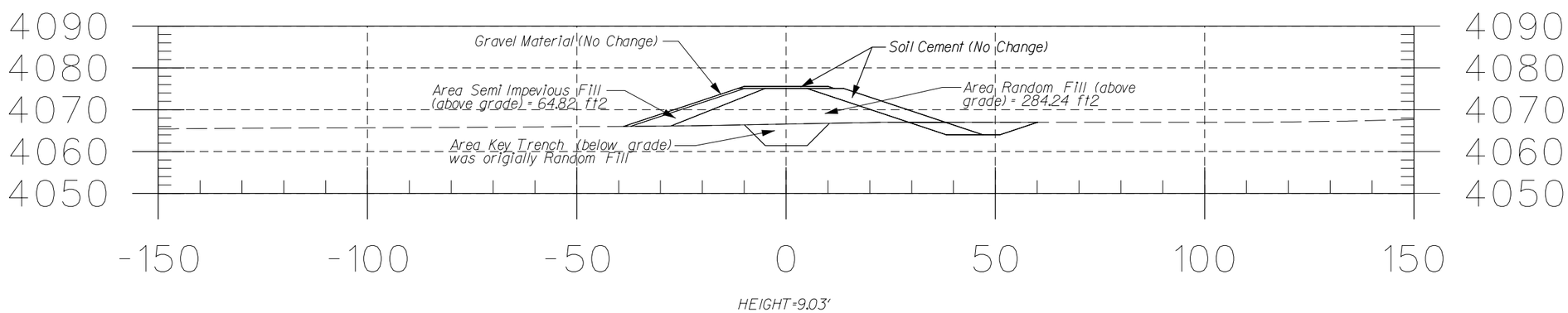

STA. 43+50A (Original 2014 Dam C Section)

Total Area above exist.grade (w/o Roller Comp Conc. & Soil Cement) = 673.08 + 132.97 = 806.05 ft2
Percent Random Fill = 673.08/806.05 = 83.50
Percent Semi Impervious Fill = 132.97/806.05 = 16.50

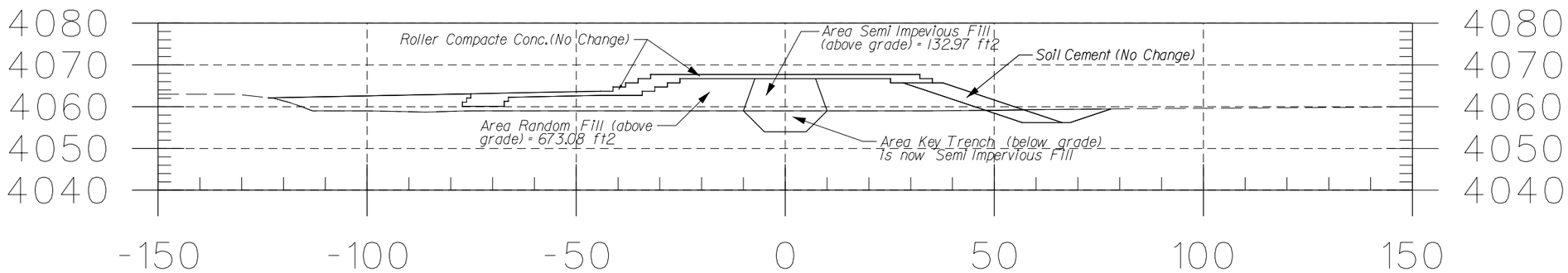

STA. 35+00A (Modified 2015 Dam C Spillway Section)

Total Area above exist.grade (w/o Roller Comp Conc. & Soil Cement) = = 806.05 ft2
Percent Random Fill = 806.05/806.05 = 100

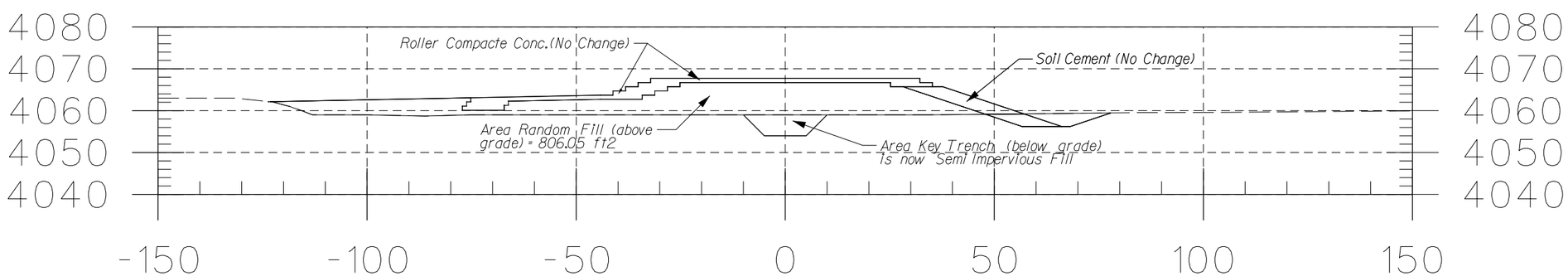

STA. 35+00A (Original 2014 Dam C Spillway Section)

Weighted/Average Dam C Height

Current/Modified 2015 Dam Section

HATCH DAM

Weighted/Average Dam Height (above existing grade)

Sta. 5+52.05 To Sta. 47+42.81

STATION No.	DISTANCE (ft.)	DAM HEIGHT (ft)	AVERAGE DAM HEIGHT Avg Ht*Dist	SUBTOTAL
552.05				
552.05	0.00	0.00	0.00	0.00
650.00	97.95	2.10	102.85	102.85
750.00	100.00	4.10	310.00	412.85
850.00	100.00	5.47	478.50	891.35
950.00	100.00	7.54	650.50	1541.85
1050.00	100.00	8.97	825.50	2367.35
1150.00	100.00	9.10	903.50	3270.85
1250.00	100.00	10.10	960.00	4230.85
1350.00	100.00	11.73	1091.50	5322.35
1450.00	100.00	11.42	1157.50	6479.85
1550.00	100.00	12.10	1176.00	7655.85
1650.00	100.00	12.10	1210.00	8865.85
1750.00	100.00	12.10	1210.00	10075.85
1850.00	100.00	16.10	1410.00	11485.85
1950.00	100.00	17.93	1701.50	13187.35
2050.00	100.00	18.10	1801.50	14988.85
2150.00	100.00	18.10	1810.00	16798.85
2250.00	100.00	18.10	1810.00	18608.85
2350.00	100.00	18.10	1810.00	20418.85
2450.00	100.00	18.10	1810.00	22228.85
2550.00	100.00	18.10	1810.00	24038.85
2650.00	100.00	18.10	1810.00	25848.85
2750.00	100.00	18.06	1808.00	27656.85
2850.00	100.00	18.10	1808.00	29464.85
2950.00	100.00	18.10	1810.00	31274.85
3050.00	100.00	17.94	1802.00	33076.85
3150.00	100.00	17.10	1752.00	34828.85
3250.00	100.00	18.17	1763.50	36592.35
3331.00	81.00	17.01	1424.79	38017.14
3695.80	364.80	14.10	5674.46	43691.60
3800.00	104.20	13.89	1458.28	45149.88
3900.00	100.00	13.03	1346.00	46495.88
4000.00	100.00	10.43	1173.00	47668.88
4100.00	100.00	10.10	1026.50	48695.38
4200.00	100.00	9.64	987.00	49682.38
4300.00	100.00	9.11	937.50	50619.88
4400.00	100.00	8.10	860.50	51480.38
4435.00	35.00	7.53	273.53	51753.91
4493.00	58.00	10.00	508.37	52262.28
4550.00	57.00	9.22	547.77	52810.05
4620.86	70.86	7.00	574.67	53384.72
4720.86	100.00	7.00	700.00	54084.72
4742.81	21.95	0.00	76.83	54161.55
Total Dist =	**4190.76**	Sum =	54161.55	
Sta. Dist Chk=	4190.76		Avg Dam Ht	12.92

Note: See profile (next page) for dam height values vs. correponding station.

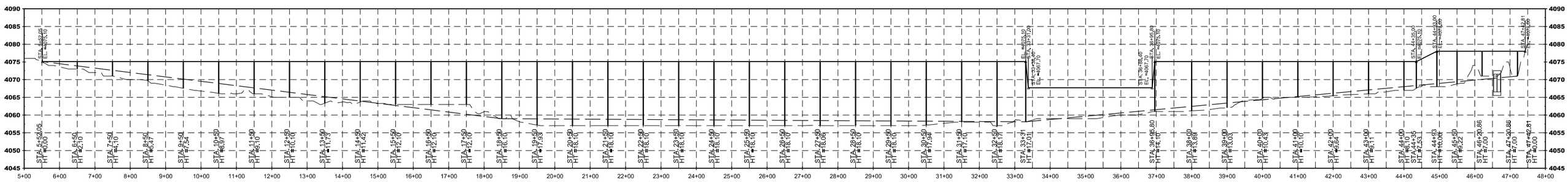

DAM C PROFILE

DAM C Random Fill (General) and Drainage Blanket (above existing grade) Quantity Adjustments

Current/Modified 2015 Dam Section

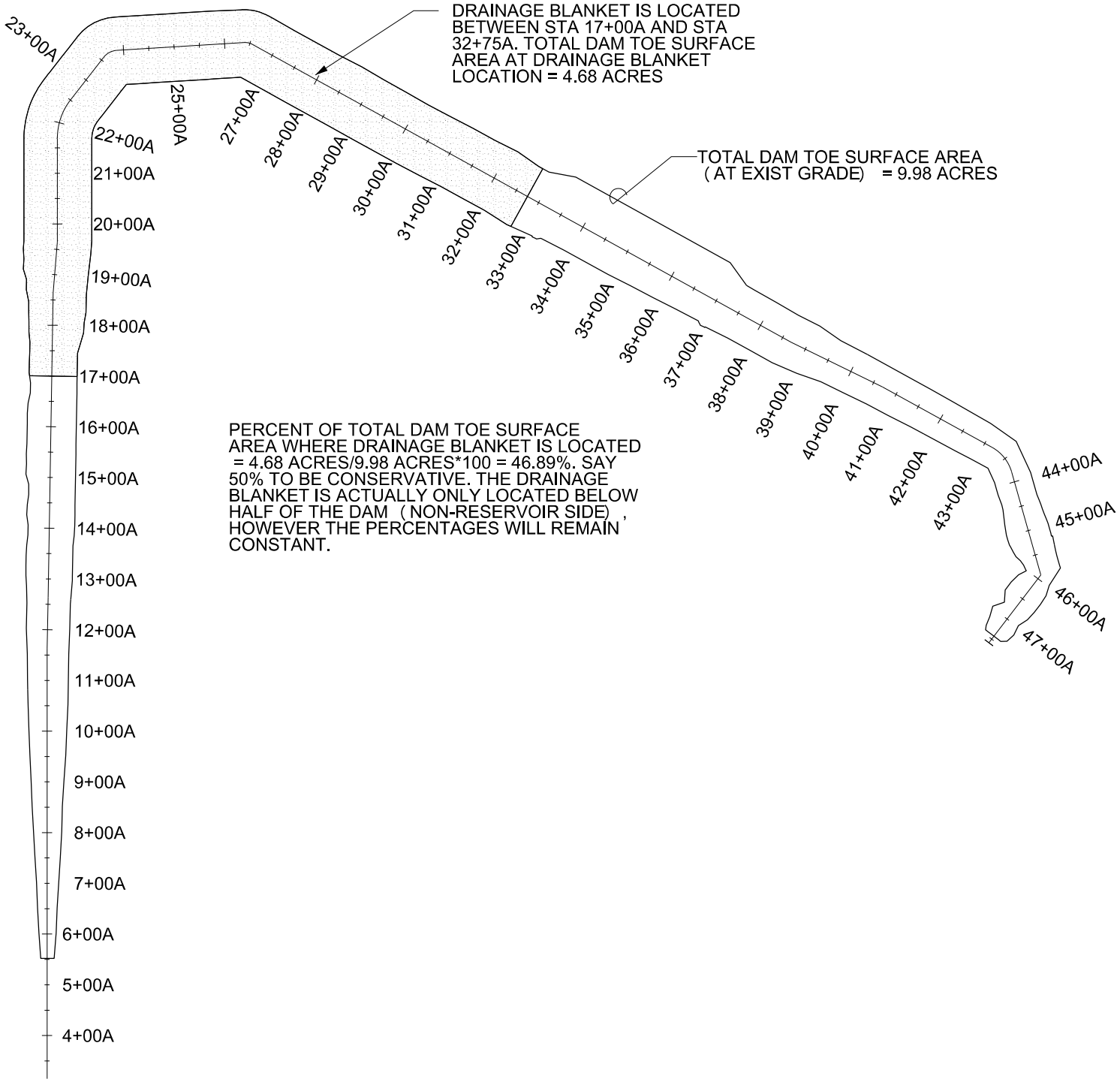
DRAINAGE BLANKET IS LOCATED BETWEEN STA 17+00A AND STA 32+75A. TOTAL DAM TOE SURFACE AREA AT DRAINAGE BLANKET LOCATION = 4.68 ACRES
TOTAL DAM TOE SURFACE AREA (AT EXIST GRADE) = 9.98 ACRES
PERCENT OF TOTAL DAM TOE SURFACE AREA WHERE DRAINAGE BLANKET IS LOCATED = 4.68 ACRES/9.98 ACRES*100 = 46.89%. SAY 50% TO BE CONSERVATIVE. THE DRAINAGE BLANKET IS ACTUALLY ONLY LOCATED BELOW HALF OF THE DAM (NON-RESERVOIR SIDE), HOWEVER THE PERCENTAGES WILL REMAIN CONSTANT.
23+00A
22+00A
21+00A
20+00A
19+00A
18+00A
17+00A
16+00A
15+00A
14+00A
13+00A
12+00A
11+00A
10+00A
9+00A
8+00A
7+00A
6+00A
5+00A
4+00A
25+00A
27+00A
28+00A
29+00A
30+00A
31+00A
32+00A
33+00A
34+00A
35+00A
36+00A
37+00A
38+00A
39+00A
40+00A
41+00A
42+00A
43+00A
44+00A
45+00A
46+00A
47+00A